NSTX Upgrade

Seismic Analysis

NSTXU-CALC-10-02-00

Rev 0

February 9 2011

Prepared By:

Peter Titus, Engineering Analysis Division

Reviewed By:

F. Dahlgren PPPL Mechanical Engineering (retired)

Approved By:

Phil Heitzenroeder, Head, Mechanical Engineering

PPPL Calculation Form

Calculation # **NSTXU-CALC-10-02-00** Revision # 00 WP #, 0029,0037 (ENG-032)

Purpose of Calculation: (Define why the calculation is being performed.)

Calculate the response of the NSTX upgrade to a a seismic event and qualify the NSTX upgrade tokamak to the standards set for the project by the DOE . Stress levels will be reported for inclusion in other calculations addressing specific components. Where seismic stress levels are significant and a where they are the primary loading of the component, for example, the lateral braces, their adequacy will be addressed in this calculation.

References (List any source of design information including computer program titles and revision levels.)

-See the reference list in the body of the calculation

Assumptions (Identify all assumptions made as part of this calculation.)

Only the tokamak and it's major structural components is included in this calculation. Peripheral support systems, neutral beams, SF6 tanks are assumed qualified in the original seismic analyses of the initial installation of NSTX. 0% damping is assumed although the 5% damped response curve would be more consistent with the tokamak assembly with insulation , instrumentation and many bolted connections.Vertical excitation is not considered. The first vertical frequency of significance is at 26 hz (mode 8) , away from the peak of the vertical building response.

Calculation (Calculation is either documented here or attached)

Attached in the body of the calculation

Conclusion (Specify whether or not the purpose of the calculation was accomplished.)

NSTX is structurally adequate to survive a prescribed seismic event, with minor modifications to improve the shear load capability of the angled braces concrete anchors

Cognizant Engineer's printed name, signature, and date

Peter Titus _____

I have reviewed this calculation and, to my professional satisfaction, it is properly performed and correct.

Checker's printed name, signature, and date

Fred Dahlgren _____

1.0 Table of Contents

Table of Contents		1.0
Executive Summary		2.1
Digital Coil Protection System		2.2
Introduction		2.33
Criteria		3.0
Design Input		4.0
Materials		5.0
References		6.0
Analysis and Analysis Model	=	7.0
Run Log		7.2
Static Analysis Results		8.0
Displacement Results		8.2
Embedment/Hilti Loads		8.2
Response Spectra Modal Analysis Results		9.0
Displacement Results		9.1
Vessel Shell		9.2
Support Structure Stresses		9.3
Bellows		9.4
Coil Stresses		9.5
Aluminum Block Stresses		9.6
Umbrella Reinforcements		9.7
Embedment/Hilti Loads		9.8
Mode Shapes, and Frequencies		10
Attachment A NSTX Seismic Analysis Report		page 27
Attachment B NCSX Specification Seismic Requirements for NCSX		page 34

2.0 Executive Summary:

NSTX is structurally adequate to survive a prescribed seismic event, with minor modifications to improve the shear load capability of the angled brace concrete anchors. Most components of NSTX are lightly loaded during an earthquake.

At the PDR, only a static analysis of the NSTX global model had been done. This is conservative with respect to the original NSTX seismic analysis which was a static overturning analysis. In the PDR analysis of the global model, .5 g's lateral were applied vs. . the original .135g requirement. The high acceleration was partially intended to address unknown masses (essentially diagnostics) not included in the global model. The appropriateness of this assumption is born out by the global reactions, tabulated below which show a more rigorous response spectra analysis is more severe than a .5g static evaluation. Coil Stresses are small due to a seismic event. These can be ignored in the evaluation of coil stresses.

. Analysis results show the outboard braces as limiting. A shear design capacity of 13000 lbs and a tensile capacity of 9000lbs is recommended

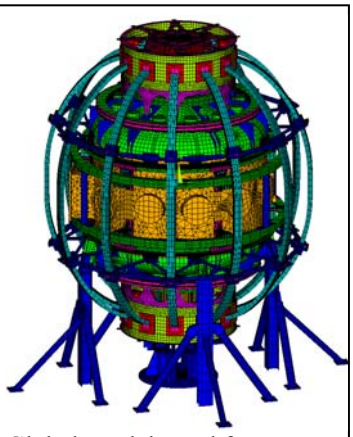

Global Model Used for Seismic Analysis

Global Reaction Summations

	FX Sum (N)	FY Sum (vert)(N)	Fz
Static Analysis	.3581e6 (.5g)	.715e6	0
Modal Analysis	.916e6	2.42e6	.913e6

Hilti Drop-In

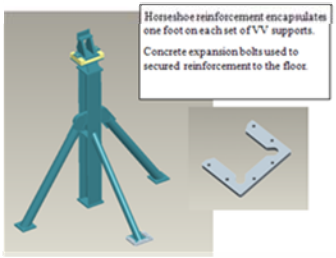

Hilti HDI Concrete Flush Anchor Tests

	2000psi	Concrete	4000psi	Concrete	6000psi	Concrete
Anchor Size	Tension	Shear	Tension	Shear	Tension	Shear
HDI [illegible]	[illegible]	[illegible]	[illegible]	[illegible]	[illegible]	[illegible]
HDI - 3/8	[illegible]	[illegible]	[illegible]	[illegible]	[illegible]	[illegible]
HDI 1/2	3997	5873	6751	6224	10200	9350
HDI 5/8	5849	8883	9696	12205	10400	13600
HDI 3/4	[illegible]	[illegible]	[illegible]	[illegible]	[illegible]	21200

Allowable Design Loads are ¼ these Values, i.e. a F.S. of 4 is recommended

A shear design capacity of 13000 lbs and a tensile capacity of 9000lbs is recommended.

For shear, use 13000/6224*4 = 8 ½ " Hiltis, For Tension use 9000/6751*4=5 ½ "Hilties

13 ½ " Hiltis Total per Leg

-or For shear use 13000/9696*4 = 4 5/8 Hiltis, for Tension use 4 5/8 Hiltis

Or 8 5/8 Hilti's Total per Leg

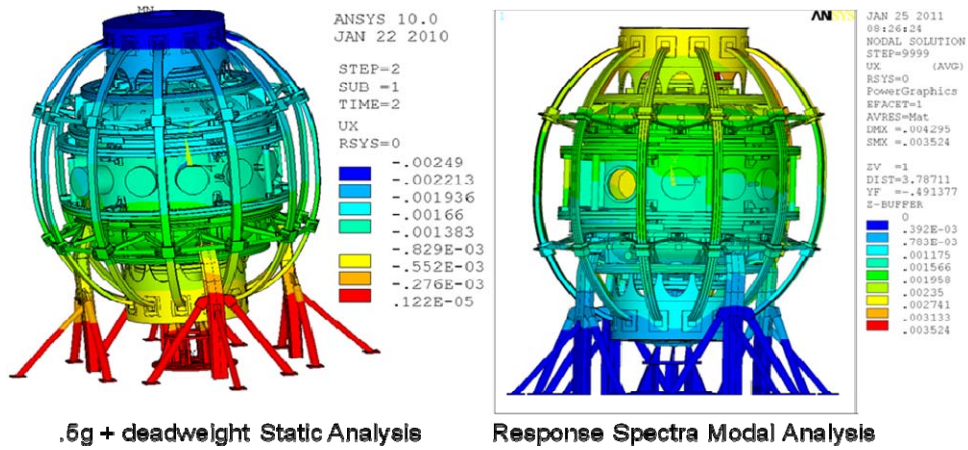

.5g + deadweight Static Analysis Response Spectra Modal Analysis

Two types of analysis were performed, both based on the global analysis model - Ref [8]

MODE	FREQUENCY	DAMPING	SV	MODE COEF.
1	7.552	0.0000	7.0560	-0.2180
2	7.737	0.0000	7.0560	-0.5650
3	7.892	0.0000	7.0560	0.4051
4	19.11	0.0000	7.0560	0.4360E-01
5	19.46	0.0000	7.0560	-0.1304E-01
6	23.89	0.0000	6.3763	-0.5626E-02
7	23.94	0.0000	6.3687	-0.3525E-02
8	26.01	0.0000	6.0761	0.1780E-02
11	31.03	0.0000	5.4951	0.5901E-03
13	32.82	0.0000	5.3223	0.1096E-02

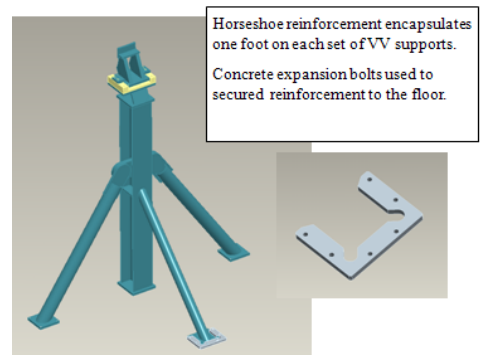

Horseshoe bracing needed at Four of the Brace Feet.

2.2 Digital Coil Protection System

No input to the DCPS is required for seismic qualification. A seismic event cannot be anticipated or mitigated by the DCPS.

2.3 Introduction

Seismic analysis and qualification of NSTX is presented. DOE requirements as outlined in DOE-STD-1020-2002 are followed for determination of the necessity for seismic qualification of NSTX and its related systems. This calculation only addresses the tokamak. IBC-2000 is followed for the qualification requirements. The tokamak presents minimal occupational hazards and hazards to the public. The qualification effort is intended to preserve the viability of continuing the experiment after an earthquake, and to explore the sensitivity of the design to dynamic loading from sources other than normal operation. Both static analysis and a response spectra modal analysis have been employed. The model is the global model used to qualify components of the upgrade. The major structural components of the tokamak are the vessel, pedestal, support columns and their angled braces.

The centerstack is well connected to the vessel structure through the lid/spoke assemblies on top and bottom. Compared with other tokamaks, the structural elements are not as robust because of the larger plasma volume and lower field used in the experiment. However, NSTX has no superconducting coils requiring weak thermal and thus

weak structural connection to the ground. NSTX support columns are robust, and angled braces were added during the initial evaluation of seismic loads.

This analysis is an update of that original qualification, reference [1] , NSTX SEISMIC DESIGN ANALYSIS REPORT, 71-990611-JHC-01, Revision 00,June 11, 1999, Prepared By: James H. Chrzanowski, Douglas G. Loesser, Mike Kalish, Bob Parsells. This earlier calculation was a static analysis assessment of the overturning moment from the lateral seismic acceleration. In this calculation a lateral acceleration was applied to the global analysis model. In addition, a response spectra modal analysis was performed.

In the modal analysis, the lowest translational mode is mode 3 at 7.9 cps. Entering the 5% damped ARS at a period of .126 yields the an acceleration in the broadened resonant peak of .24 g's which is scaled by 2 to .48 g's. This is similar to the static acceleration assumed at the PDR . The damped ARS is used because the complex appendages on the outside of the tokamak are expected to add significant damping. The only significant structural issue is the shear restraint at the angled braces. These were added to provide additional lateral stability against overturning moments. The original hand-overturning analysis assumed a rigid structure. The analyses described in this report are based on a detailed structural analysis that models all the appropriate flexibilities and the load distributions that result. Model analysis produces similar lateral acceleration to the assumed static acceleration, but the loads at the braces are very different. The modal results in section 9.8 show a peak shear load of about 13000 lbs, and the static results reported in section 8.2 are similar. Global reaction forces are more than twice the static reacton.

Development of the minimum static seismic acceleration

Fp = Z I Cp WP = 0.135 Wp

Where:

Fp = lateral seismic forces
Z = a seismic zone factor.
I = an importance factor.
Cp = a horizontal force factor.
Wp = the weight of element or component

"Z" seismic zone factor: was determined using table 3 of DOE-STD-1024-92 "Probabilistic Hazard Results for DOE sites.

For PPPL, Z = 0.09 g[1]

"I" importance factor: for PC-1, was determined using tables 23-K and 23-L of the Uniform Building Code (UBC)

For PC-1, I = 1.00

"Cp" horizontal force factor: = (1.5) for non-rigid elements

= (2.0) for cantilevered walls

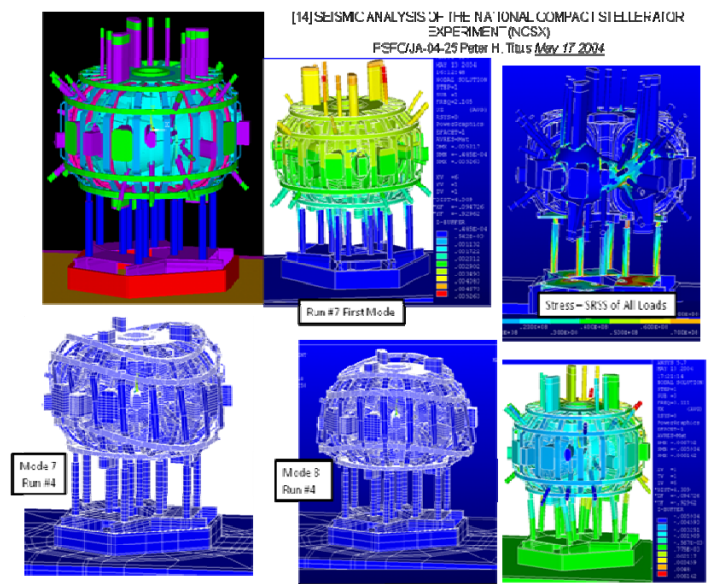

Figure 2.3-1 NCSX Analysis Results [14]

Subsequent to the NSTX static seismic analysis, a seismic analysis was performed on NCSX by P. Titus and was later updated by Fred Dahlgren. The P.Titus work was documented in a MIT PSFC report. Mike Kalish provided an update of the DOE requirements for the NCSX calculation which formed the basis for the NSTX modal analysis.

3.0 Criteria

From Ref [2]:

I-1.8 Seismic Loads (F_{DBE})

The NCSX facility will be classified as a Low Hazard (LC)/Hazard Category 3 (HC3) facility. All Structures, Systems, and Components (SSC) of NCSX shall be categorized in accordance with DOE-STD-1021-93 ("Natural Phenomena Hazards Performance Categorization Criteria for Structures, Systems, and Components," 7/93) to determine the appropriate Performance Category. For those SSCs that require seismic design, the applicable Design Basis Earthquake (DBE) acceleration values and evaluation techniques specified in DOE-STD-1020-94 ("Natural Phenomena Hazards Design and Evaluation Criteria for Department of Energy Facilities," 4/94) and DOE-STD-1024-92 ("Guidelines for Use of Probabilistic Seismic Hazard Curves at Department of Energy Sites," 12/92) shall be used.

I-2.3 Unlikely Events $10^{-2} > P \geq 10^{-4}$

$D + P + T_O + F_{DBE} + IR + L$

$D + P + T_O + (EM\text{-}F \text{ per FMECA}) + IR + L$

D=Deadweight, P-Design Pressure, F_{DBE} = Seismic, Design Basis Earthquake, T_O=Normal operation thermal effects, IR= Interaction Loads , L=preloads

Unlikely	In addition to the challenged component, inspection may reveal localized large damage, which may call for repair of the affected components.	Material plasticity, local insulation failure or local melting which may necessitate the removal of the component from service for inspection or repair of damage to the component or support.	The facility may require major replacement of faulty component or repair work.

- Primary membrane plus bending stresses shall not exceed 1.5 KS_m
- For *unlikely* conditions, K = 1.2; evaluation of secondary stress not required

Input ARS

This comes from IBC2000, ref [13], via ref. 7. It is the recommended ground motion, exclusive of any amplification of a building. To estimate the effects of building amplification, the TFTR cell results will be used. These were used by Scott Perfect in the TPX gravity support qualification The ground motion ARS peaks out at .36g and the TFTR/TPX ARS peak at around twice this. Mike Kalish provided the IBC 2000 instructions for estimating the effect of the building and this worked out to 1.48 vs. the factor of 2.0 chosen for the analysis.

	Spectral Acceleration, g	
Period, Sec	**MCE**	***5% Damped MCE***
0.00	0.144	*0.096*
0.05	0.360	*0.240*

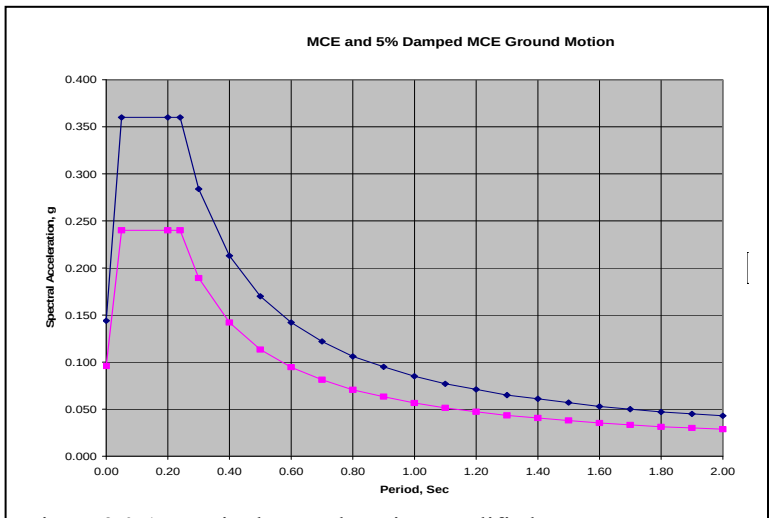

0.20	0.360	*0.240*
0.24	0.360	*0.240*
0.30	0.284	*0.189*
0.40	0.213	*0.142*
0.50	0.170	*0.113*
0.60	0.142	*0.095*
0.70	0.122	*0.081*
0.80	0.106	*0.071*
0.90	0.095	*0.063*
1.00	0.085	*0.057*
1.10	0.077	*0.051*
1.20	0.071	*0.047*
1.30	0.065	*0.043*
1.40	0.061	*0.041*
1.50	0.057	*0.038*
1.60	0.053	*0.035*
1.70	0.050	*0.033*
1.80	0.047	*0.031*
1.90	0.045	*0.030*
2.00	0.043	*0.029*

```
!ANSYS SPECTRU INPUT
spopt,sprs,10,yes
svtyp,2,2.0*9.8
sed,1,0,0
FREQ,.55555556,.58823529,.625,.66666667,.71428571,.769
23077,.83333333,.90909091,1
FREQ,1.1111111,1.25,1.4285714,1.6666667,2,2.5,3.333333
3,4.1666667,5
FREQ,20,100
sv,0.0,.047,.05,.053,.057,.061,.065,.071,.077,.085
sv,0.0,.095,.106,.122,.142,.17,.213,.284,.36,.36
sv,0.0,.36,.144
sv,0.05,.031,.033,.035,.038,.041,.043,.047,.051,.057
sv,0.05,.063,.071,.081,.095,.113,.142,.189,.24,.24
sv,0.05,.24,.096
```

The response Spectra is scaled in the ANSYS ADPL using the SVTYP command: From ANSYS Help

SVTYP, *KSV*, *FACT* Defines the type of single-point response spectrum.

KSV

Response spectrum type:

0 — Seismic velocity response spectrum loading (SV values interpreted as velocities with units of length/time).

1 — Force response spectrum loading (SV values interpreted as force amplitude multipliers).

2 — Seismic acceleration response spectrum loading (SV values interpreted as accelerations with units of length/time^2).

3 — Seismic displacement response spectrum loading (SV values interpreted as displacements with units of length).

4 — PSD loading (SV values interpreted as acceleration^2/(cycles/time), such as (in/sec^2)^2/Hz (not g^2/Hz)). (Not recommended)

FACT

Scale factor applied to spectrum values (defaults to 1.0). Values are scaled when the solution is initiated Database values remain the same

From a May 17th email from Mike Kalish, ref 12:

"The IBC 2000 [13] does provide a simple linear formula for adjusting the seismic input for height in the building for the static seismic analysis which we can probably argue is reasonable to apply to your dynamic analysis.

(1 + 2*z/h)
With Basement Elevation = 0' Test Cell Elevation = 13'3" Top of Steel = 55'

For the Test Cell Floor z/h = .24

for which the multiplier = 1.48

I think you can take credit for being conservative with respect to the code in picking a multiplier of x2 on the site ground ARS. As long as the results look good with this multiplier your set but if not you can keep in your back pocket the potential to role back the ARS multiplier to 1.5 "

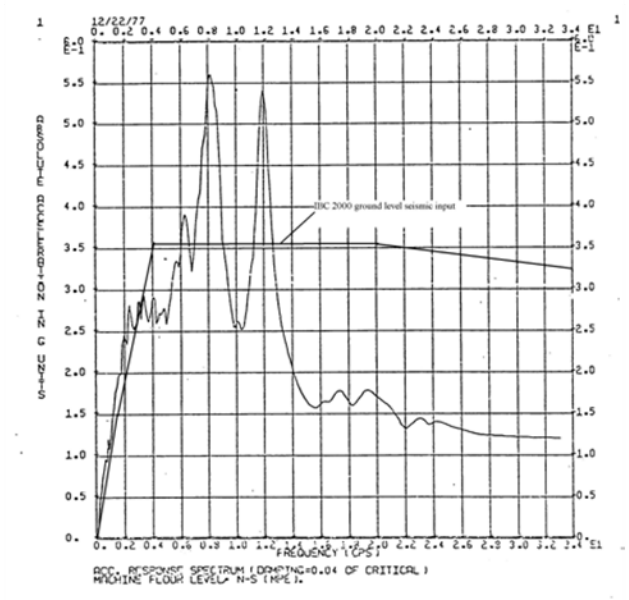

Figure North-South Response Spectrum Curve, TFTR/TPX Test Cell, ref [5]

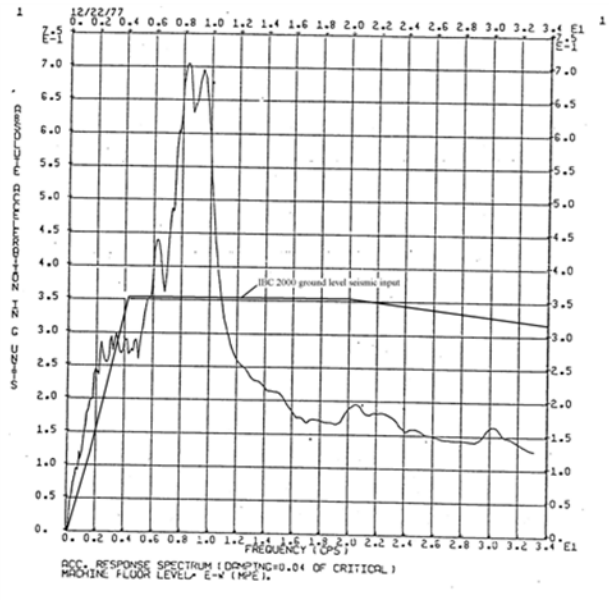

Figure East-West Response Spectrum Curve, TFTR/TPX Test Cell, ref [5]

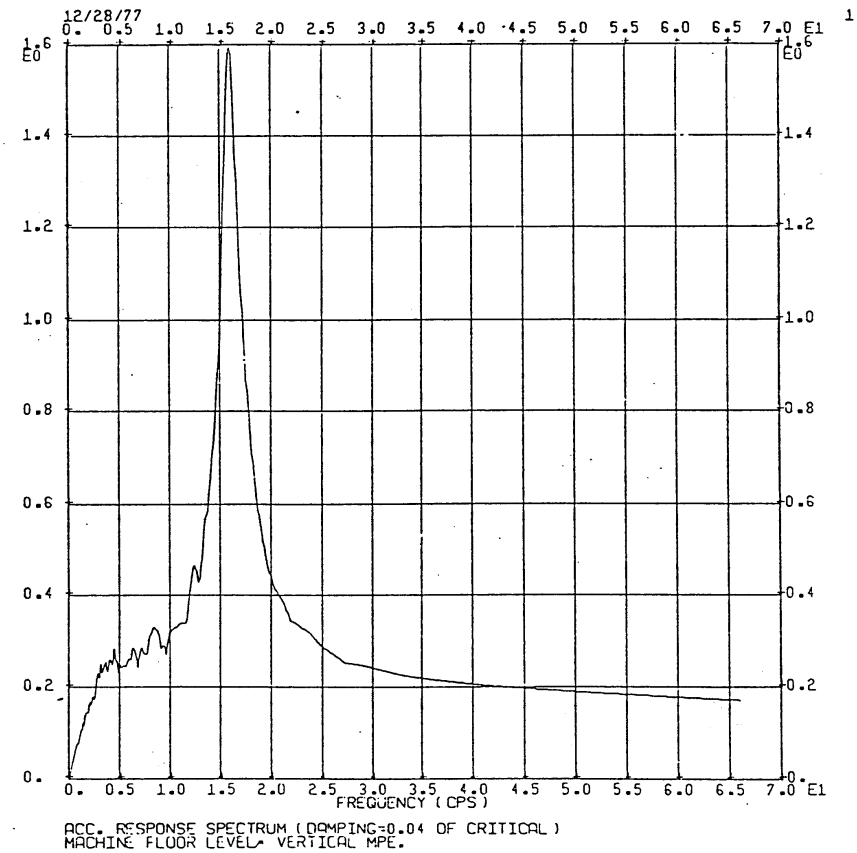

Figure Vertical Response Spectrum Curve, TFTR/TPX Test Cell, ref [5]. The vertical ARS is not used because it is small compared with the horizontal accelerations, and the fundamental vertical mode of the machine with the significant participation factor is around 26 hz,, away from the vertical ARS peak. IBC 2000 does not include any vertical ground excitation.

***** PARTICIPATION FACTOR CALCULATION ***** Y DIRECTION

MODE	FREQUENCY	PERIOD	PARTIC.FACTOR	CUMULATIVE RATIO	EFFECTIVE MASS	EFF.MASS MASS FRACTION	TO TOTAL MASS
1	7.51331	0.13310	-0.66230	0.002879	0.438638	0.813418E-05	0.596334E-05
2	7.73496	0.12928	-3.4273	0.014897	11.7464	0.225961E-03	0.159693E-03
3	7.87535	0.12698	2.1654	0.009412	4.68900	0.312915E-03	0.637475E-04
4	19.1868	0.52119E-01	-14.387	0.062537	206.998	0.415153E-02	0.281417E-02
5	19.4824	0.51328E-01	2.9864	0.012981	8.91842	0.431691E-02	0.121247E-03
6	23.9241	0.41799E-01	9.9169	0.043105	98.3455	0.614065E-02	0.133702E-02
7	24.0150	0.41641E-01	6.1194	0.026599	37.4467	0.683506E-02	0.509092E-03
8	26.3241	0.37988E-01	230.06	1.0000	52929.2	0.988363	0.719579
9	27.8857	0.35861E-01	-5.8325	0.025352	34.0184	0.988994	0.462484E-03
10	28.1427	0.35533E-01	8.5673	0.037239	73.3984	0.990355	0.997860E-03
11	34.9428	0.28618E-01	-18.562	0.080683	344.559	0.996744	0.468432E-02
12	37.4179	0.26725E-01	-1.3402	0.005826	1.79626	0.996777	0.244203E-04
13	37.8552	0.26416E-01	8.0078	0.034807	64.1255	0.997967	0.871794E-03
14	38.1964	0.26180E-01	2.1701	0.009433	4.70941	0.998054	0.640250E-04
15	39.0158	0.25631E-01	0.76987	0.003346	0.592704	0.998065	0.805788E-05
16	39.5078	0.25311E-01	-1.3154	0.005718	1.73026	0.998097	0.235232E-04
17	39.8625	0.25086E-01	-9.7273	0.042281	94.6210	0.999852	0.128638E-02
18	40.5403	0.24667E-01	2.3035	0.010013	5.30616	0.999950	0.721379E-04
19	40.7435	0.24544E-01	-0.53463	0.002324	0.285829	0.999955	0.388588E-05
20	41.5719	0.24055E-01	-1.2965	0.005636	1.68098	0.999987	0.228531E-04

21	41.8679	0.23885E-01	-0.51504	0.002239	0.265268	0.999992	0.360634E-05
22	42.0180	0.23799E-01	-0.33161	0.001441	0.109965	0.999994	0.149499E-05
23	42.8606	0.23331E-01	0.44192	0.001921	0.195292	0.999997	0.265502E-05
24	42.9049	0.23307E-01	0.39042	0.001697	0.152429	1.00000	0.207229E-05
sum				53925.3		0.733121	

References

[1] NSTX SEISMIC DESIGN ANALYSIS REPORT, 71-990611-JHC-01, Revision 00,June 11, 1999, Prepared By: James H. Chrzanowski, Douglas G. Loesser, Mike Kalish, Bob Parsells, Approved By Charlie Neumeyer, NSTX Engineering Project Head

[2]U.S. Department of Energy, "Guidelines for Use of Probabilistic Seismic Hazard Curves at Department of Energy Sites", DOE-STD-1024-92 December, 1992

[3] DOE-STD-1020-2002

[6] Seismic Dynamic Analysis of Tokamak Structures, Shaaban, AA. Ebasco Services Inc. Report # EP-D-027, February 7 1978, This is cited in [5] as the source of the ARS curves

[7] PRELIMINARY Summary and derivation of the seismic requirements for NCSX. Preliminary Rev 1 Michael Kalish 3/29/04

[8] NSTX Upgrade Global Model – Model Description, Mesh Generation, and ResultsNSTXU-CALC-13-01-00Rev 1 February 2011 Peter Titus, PPPL

[9] "Handbook on Materials for Superconducting Machinery" MCIC- HB-04 Metals and Ceramics Information Center, Battelle Columbus Laboratories 505 King Avenue Columbus Ohio 43201

[11] Product Literature, INCO Alloys International, Publication # IAI-38 Copyright 1988

[12] email from Mike Kalish: May 17th providing the IBC 2000instructions for estimating the increase in ground acceleration vs. building height.

[13] 2000 International Building Code (IBC)

[14] SEISMIC ANALYSIS OF THE NATIONAL COMPACT STELLERATOR EXPERIMENT (NCSX) PSFC/JA-04-25 Peter H. Titus *May 17 2004*

[15] NCSX SPECIFICATION Vacuum Vessel Systems (WBS 12) System Requirements Document (SRD) NCSX-BSPEC-120-00 18 March 2004

[16] NCSX (NATIONAL COMPACT STELLERATOR EXPERIMENT) STRUCTURAL DESIGN CRITERIA - DRAFT B - 4/30/04, I. ZATZ, EDITOR

[17] "General Electric Design and Manufacture of a Test Coil for the LCP", 8th Symposium on Engineering Problems of Fusion Research, Vol III, Nov 1979

[18] Structural Analysis of the TPX Cold-Mass Support System, Scott A. Perfect UCRL-ID-112614, TPX 16-921211-LLNL/S.P.-01, December 11 1992

[19] Bellows Qualification Calc # NSTXU CALC 133-10-00, Peter Rogoff'

[20] Tile Stress Analysis (ATJ) NSTXU CALC 11-03-00, Art Brooks Used to include tile weights into the effective density of the centerstack casing, transmitted via email:
": Attached are the volumes Ankita extracted from the ProE models. The density of the Center Case (inconel) is 8440 kg/m3, the tile (ATJ Graphite - www.graftech.com) is 1760 kg/m3 giving a total mass of 1138 kg and an effective density if the CS (which includes the mass of the tiles) of 12,248 kg/m3.Art "

Peter,

I spoke with Jerry Levine about the seismic requirements for NSTX. My starting point was the requirements memo I wrote for NCSX (see attached). This memo started with the Safety Assessment Document and the DOE requirement 1020-2002.

"Based on applications of DOE Order O420.1A and DOE Guide G420.1-2, PPPL is required by the Department of Energy to meet the seismic requirements of DOE-STD-1020-2002 Performance Category 1 for Seismic Use Group I. Interpretation of these requirements leads to the adoption of the International Building Code, IBC 2000, with 2/3 the Maximum Considered Earthquake (MCE, site specific) as the standard for PPPL"

It appears that these requirements have not changed since I wrote this memo in 2004 so the basic assumptions in the document should be correct.

```
The only caveat I would add is that the evaluation was done using the IBC
2000. To be thorough we might want to look for a more recent IBC and compare
that to the evaluation I did back in 2004.  Otherwise we could reinstitute my
NCSX memo as the basis for the NSTX upgrade seismic requirement. Note that
I'm nor certain if the version I have on my hard drive is the latest or if it
was ever even signed off but I can investigate further.

Mike
```

[21] Fusion Engineering and Design 54 (2001) 275–319, Engineering design of the National Spherical Torus, Experiment, C. Neumeyer et.al, Page 286 quotes 100,000 lbs for the total vacuum vessel weight

7.0 Analysis

At the PDR, only a static analysis of the NSTX global model had been done. This is conservative with respect to the original NSTX seismic analysis that was a hand static overturning analysis. In the PDR analysis of the global model, 0.5 g's lateral were applied vs. the original .135 g requirement. The high acceleration was partially intended to address unknown masses (essentially diagnostics) not included in the global model.

Mike Kalish prepared a memo that addressed the seismic requirements for NCSX. Mike spoke with Jerry Levine about the seismic requirements for NSTX. Mike's starting point was the requirements that he wrote for NCSX. This memo started with the Safety Assessment Document and the DOE requirement 1020-2002.

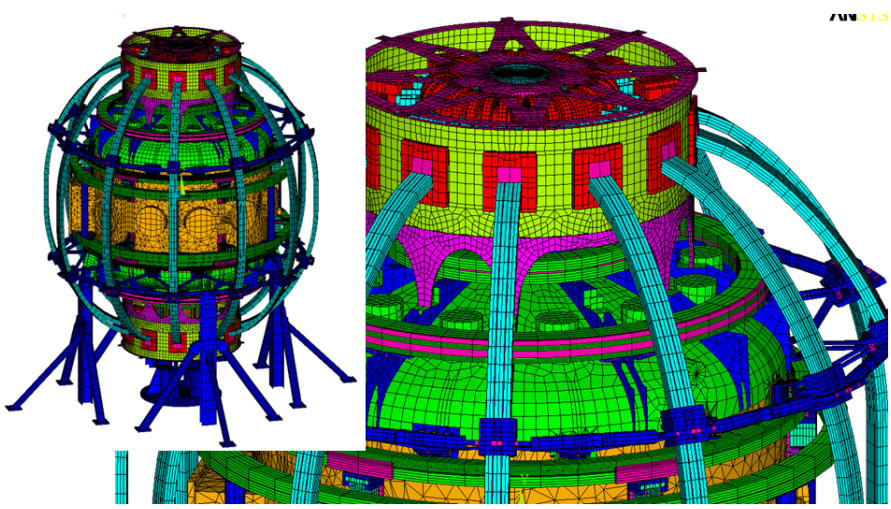

Figure 7.1 Global Model Used in Both Static and Modal Analyses

"Based on applications of DOE Order O420.1A and DOE Guide G420.1-2, PPPL is required by the Department of Energy to meet the seismic requirements of DOE-STD-1020-2002 Performance Category 1 for Seismic Use Group I. Interpretation of these requirements leads to the adoption of the International Building Code, IBC 2000, with 2/3 the Maximum Considered Earthquake (MCE, site specific) as the standard for PPPL" It appears that these requirements have not changed since Mike wrote this memo in 2004 so the basic assumptions in the document should be correct. The only caveat is that the evaluation was done using the IBC 2000. To be thorough a more recent IBC might be applicable.

Response Spectra Modal Analysis

```
file.mcom

/COM,ANSYS RELEASE 13.0
UP20101012       12:49:19
01/23/2011
/COM, file.mcom
LCOPER,ZERO
LCDEFI,1,     1,     1
LCFACT,1, -0.217989
LCASE,1
LCOPER,SQUARE
LCDEFI,1,     1,     2
LCFACT,1, -0.564958
LCOPER,ADD,1,MULT,1
LCDEFI,1,     1,     3
LCFACT,1,  0.405109
LCOPER,ADD,1,MULT,1
LCDEFI,1,     1,     4
LCFACT,1,  0.435993E-01
LCOPER,ADD,1,MULT,1
LCDEFI,1,     1,     5
LCFACT,1, -0.130370E-01
LCOPER,ADD,1,MULT,1
LCDEFI,1,     1,     6
LCFACT,1, -0.562580E-02
LCOPER,ADD,1,MULT,1
LCDEFI,1,     1,     7
LCFACT,1, -0.352451E-02
LCOPER,ADD,1,MULT,1
LCDEFI,1,     1,     8
LCFACT,1,  0.177986E-02
LCOPER,ADD,1,MULT,1
LCDEFI,1,     1,    11
LCFACT,1,  0.590136E-03
LCOPER,ADD,1,MULT,1
LCDEFI,1,     1,    13
LCFACT,1,  0.109637E-02
LCOPER,ADD,1,MULT,1
LCOPER,SQRT
```

In the static analysis the inventory of diagnostics insulations and miscellaneous equipment hung off of the vessel is accounted for by assuming .5 g's rather than the prescribed .132 g's. The modal analysis also needs to address this miscellaneous material. This is done by increasing the vessel density by an assumed factor. This is applied in an APDL script shown in the text box at right.

```
VesDensFact=1.5
*do,mat,50,53
dens,mat,8020.0*VesDensFact
*enddo
```

The last step is a macro created by the ANSYS script that combines the individual modal responses multiplied by their participation factor. /input,file,mcom. In the analysis performed for this calculation there is a difference between database created by reading the db file and the database from the results file. The file.mcom script should be run after the /post1 and set,1,1 commands to restore the proper database for the solution phase.

ANSYS ADPL Solution Phase Commands

```
/solu
antype, spectrum
spopt,sprs,24,yes
svtyp,2,2.0*9.8
sed,1,0,0
FREQ,.55555556,.58823529,.625,.66666667,.71428571,.7692
3077,.83333333,.90909091,1
FREQ,1.1111111,1.25,1.4285714,1.6666667,2,2.5,3.3333333,
4.1666667,5
FREQ,20,100
sv,0.0,.047,.05,.053,.057,.061,.065,.071,.077,.085
sv,0.0,.095,.106,.122,.142,.17,.213,.284,.36,.36
sv,0.0,.36,.144
sv,0.05,.031,.033,.035,.038,.041,.043,.047,.051,.057
sv,0.05,.063,.071,.081,.095,.113,.142,.189,.24,.24
sv,0.05,.24,.096
solve
save
fini
/solu
antype,modal
mxpand,24,,,yes
modopt,lanb,24
solve
save
fini
/solu
antype,spectrum
srss,,disp
solve
save
fini
```

8.0 Static Analysis Results

A slide from the PDR is included below. At the PDR, only a static analysis was available. The seismic response was approximated by a static response with .5 g's applied. This was intended to be conservative to envelope subsequent modal analyses planned for the PDR. In this analysis the "out-rigger" angular braces saw large shear loads and a "horseshoe" restraint was added. During the FDR, the global model was updated and run with both static and modal analyses. The 1e6 embedment load was a mistake which was corrected in subsequent analyses.

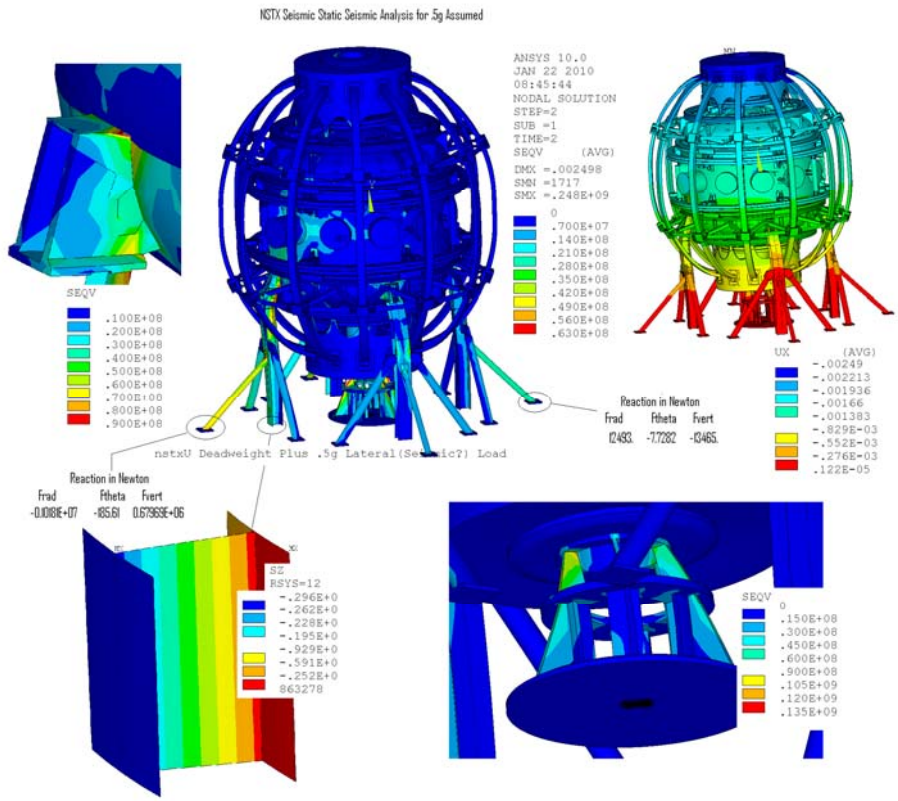

8.1 Static Analysis Displacement Results

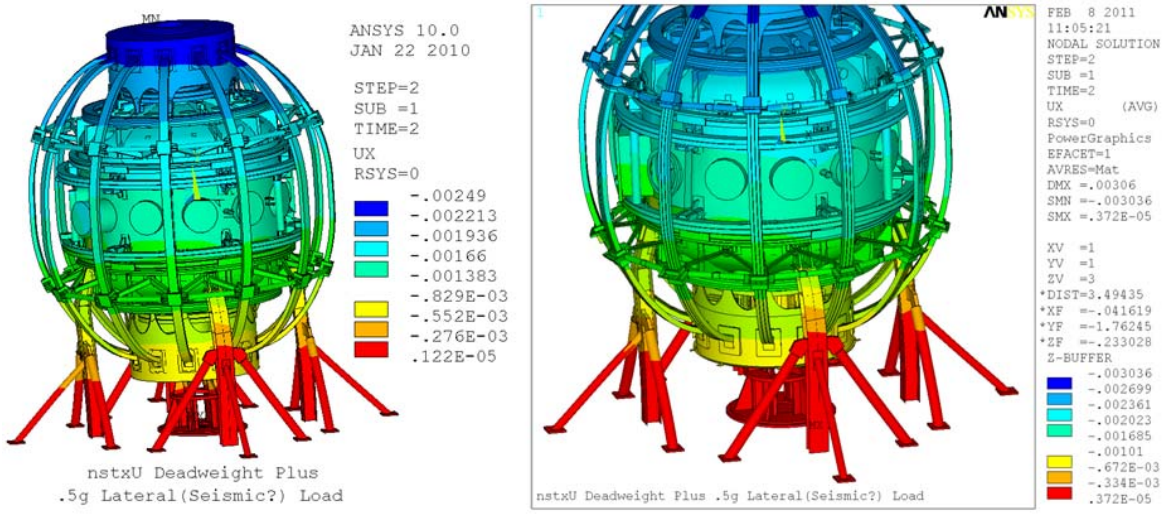

8.2 Embedment/Hilti Loads

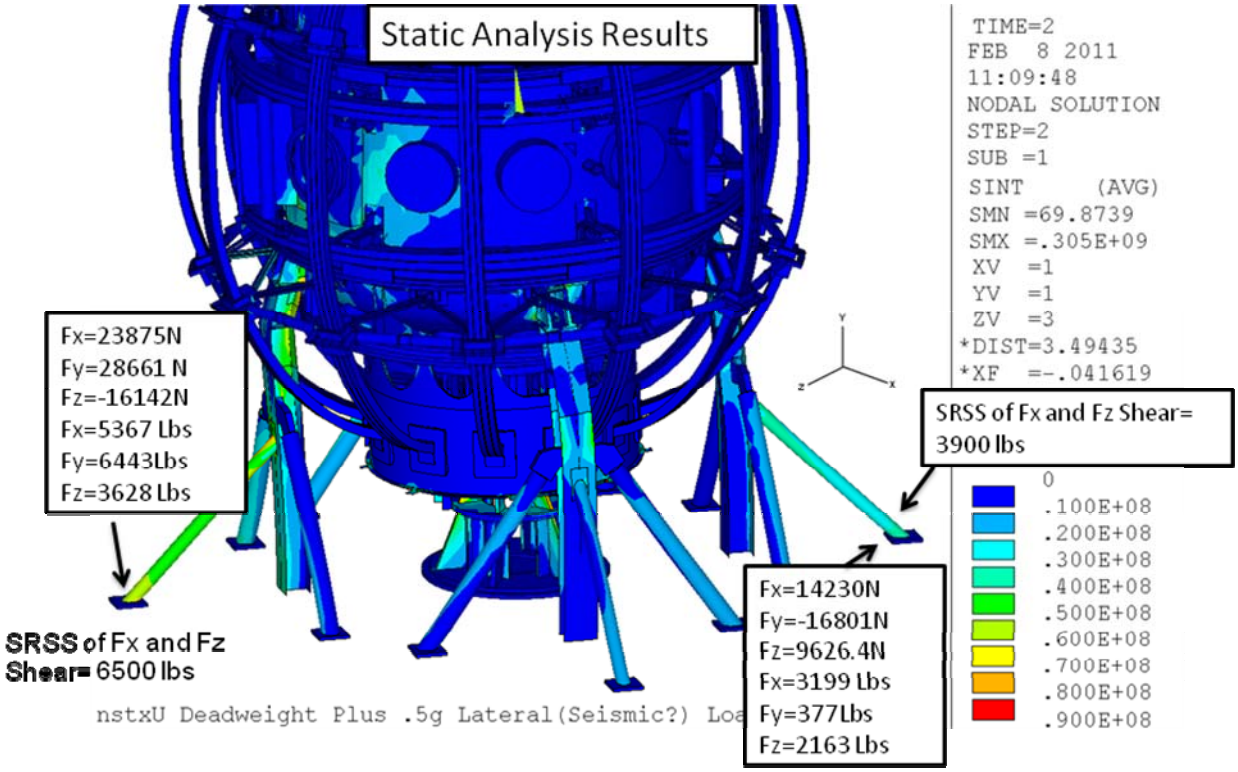

Figure 8.2-1 Static Analysis Embedment Loads

The modal results in section 9.8 show a peak shear load of about 13000 lbs, and the static results above is 6500 lbs. The modal analysis results are used to qualify the brace embedment loads.

Figure 8.2-2 Brace Welds and Hilt' Cap Screws.

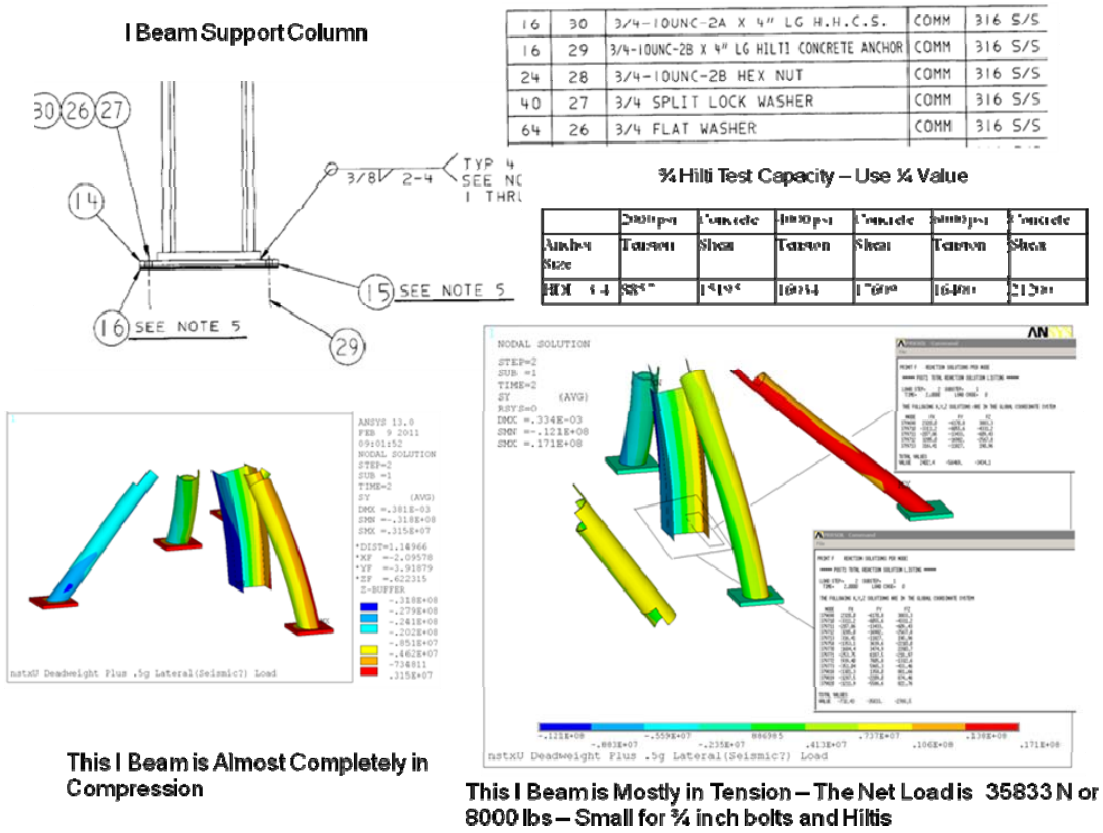

Figure 8.2-3 I-Beam Column Loads.

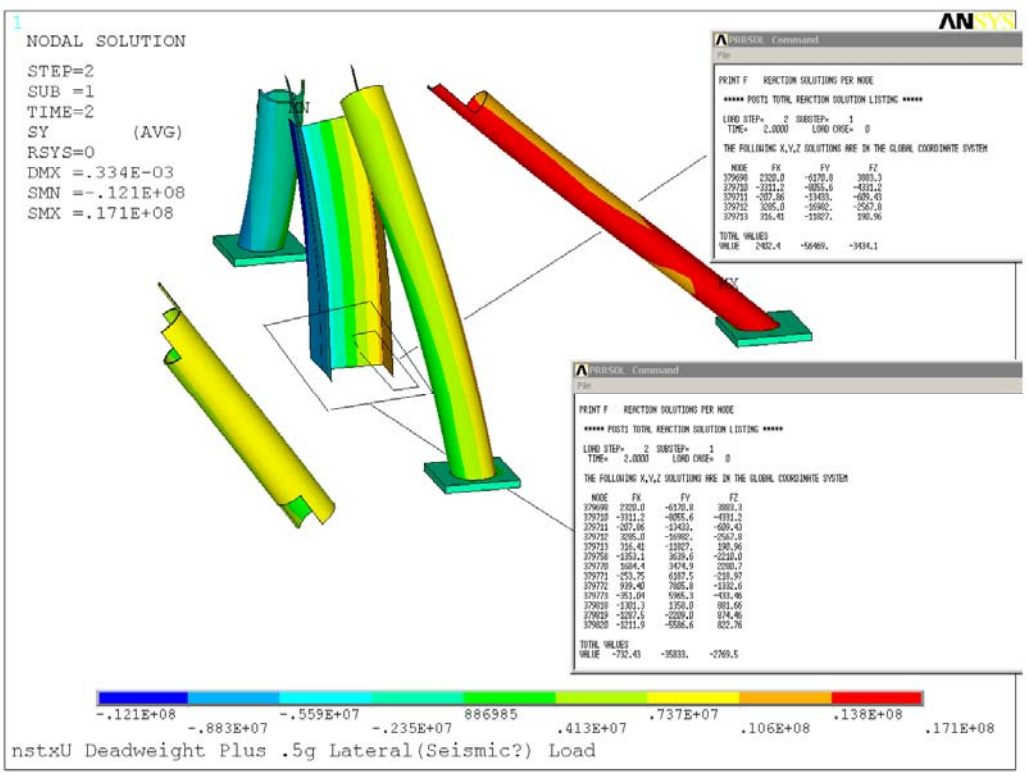

Figure 8.2-4 I-Beam Column Loads -Expanded Plot.

4. BOTTOM PLATE OF VERTICAL SUPPORT LEG WELDMENT, PART 4, TO BE WELDED TO BASE PLATE (.50 THICK), PART 14, AFTER VACUUM VESSEL ASSEMBLY IS LOCATED IN ITS FINAL POSITION.

5. BASE PLATES, PARTS 15 IND 16, TO BE USED AS REQUIRED TO OBTAIN 156" HORIZONTAL CENTERLINE HEIGHT OF VACUUM VESSEL ABOVE TEST CELL FLOOR.

4	4	VERTICAL SUPPORT LEG WELDMENT	E-DB1041-1	SEE DWG

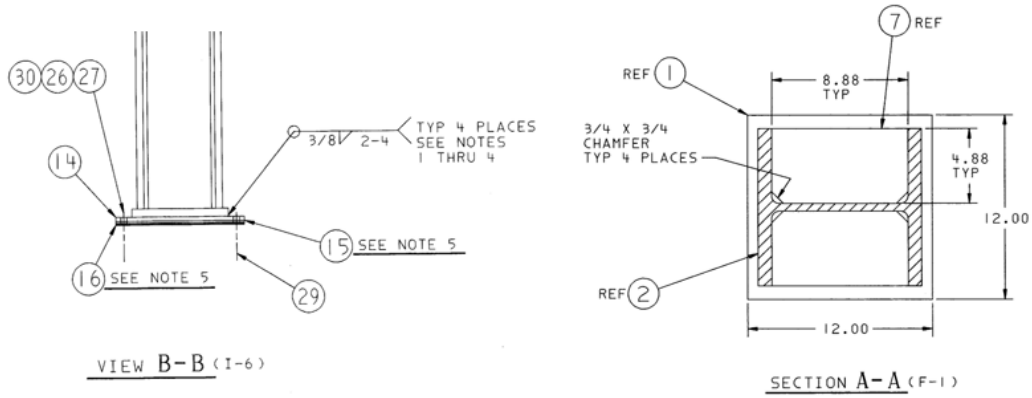

Figure 8.2-4 I-Beam Column Base Plate Details.

One side of the intermittent weld at the base of the column see some tension -The weld stress is 8000 lbs/(12/2)/(3/8*.707) = 5029 psi which is an acceptable weld stress.

9.0 Response Spectra Modal Analysis Results

The lowest translational mode is mode 3 at 7.9 cps. Entering the ARS at a period of .126 yields the an acceleration in the broadened resonant peak of .24 g's which is scaled by 2 to .48 g's.

9.1 Displacement Results

The displacements from the modal analysis appear to be a shear deformation rather than an overturning displacement. The static analysis results look more like an overturning motion. The difference is subtle, looking at the displacement plots in section 8.1 But the shear (modal) vs overturning (static) deformation is consistent with the difference in character of the embedment loads.

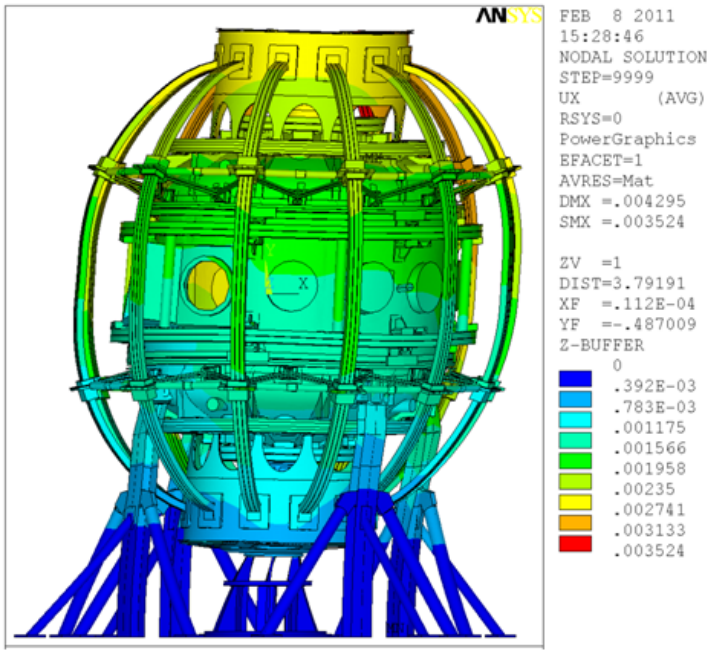

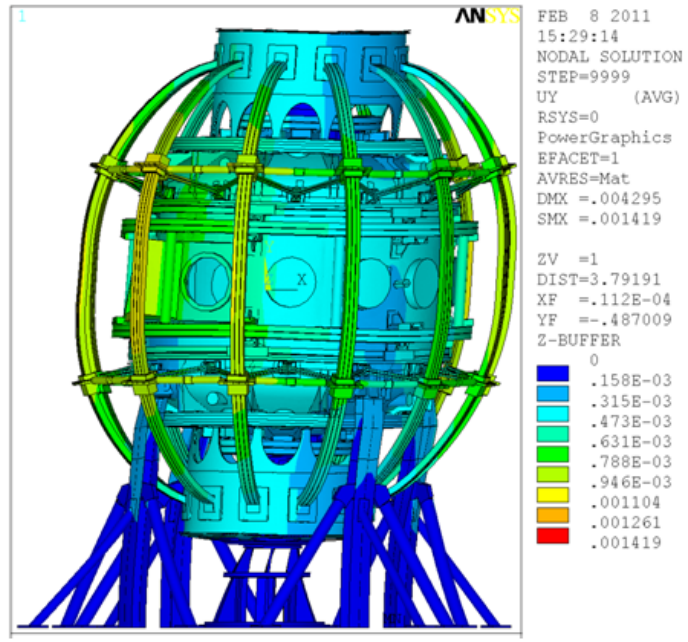

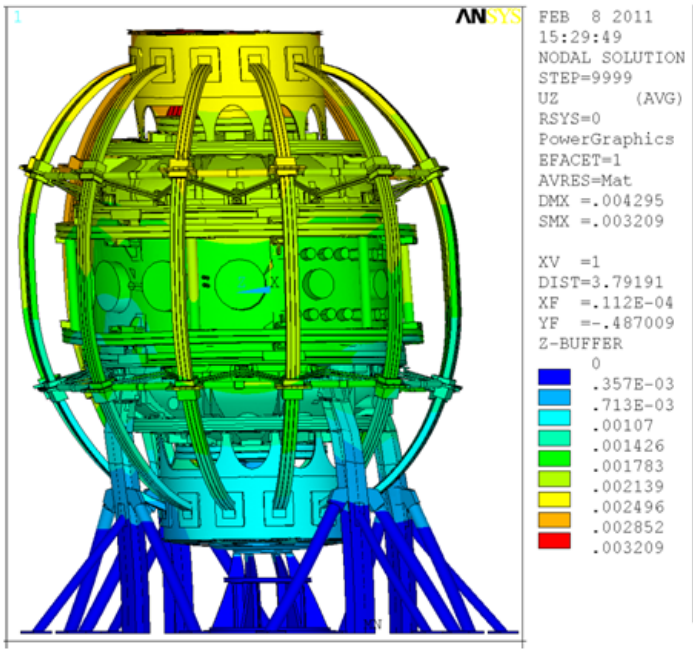

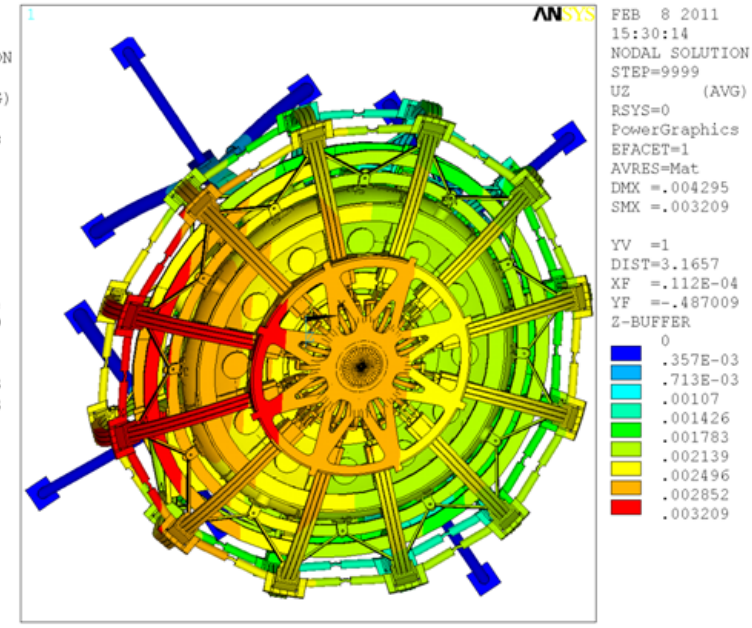

9.2 Vessel Shell Stresses

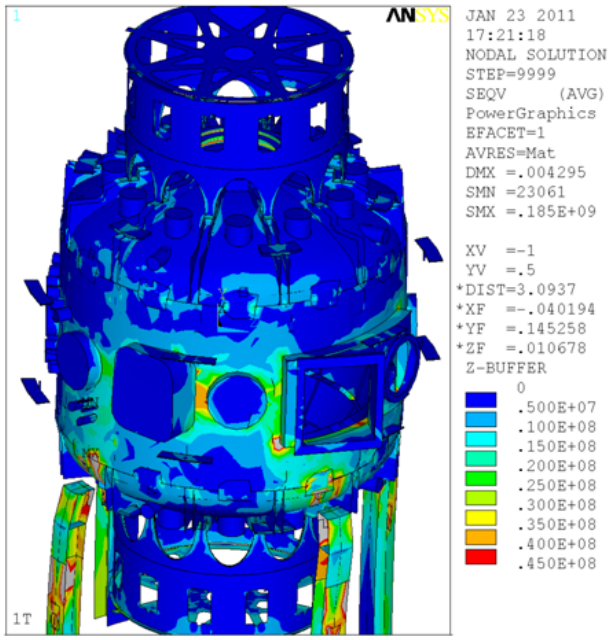

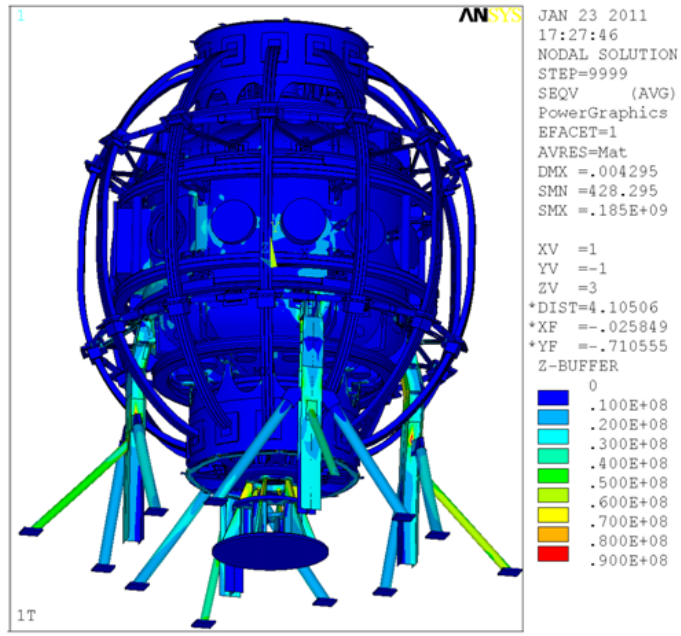

9.3 Support Structure Stresses

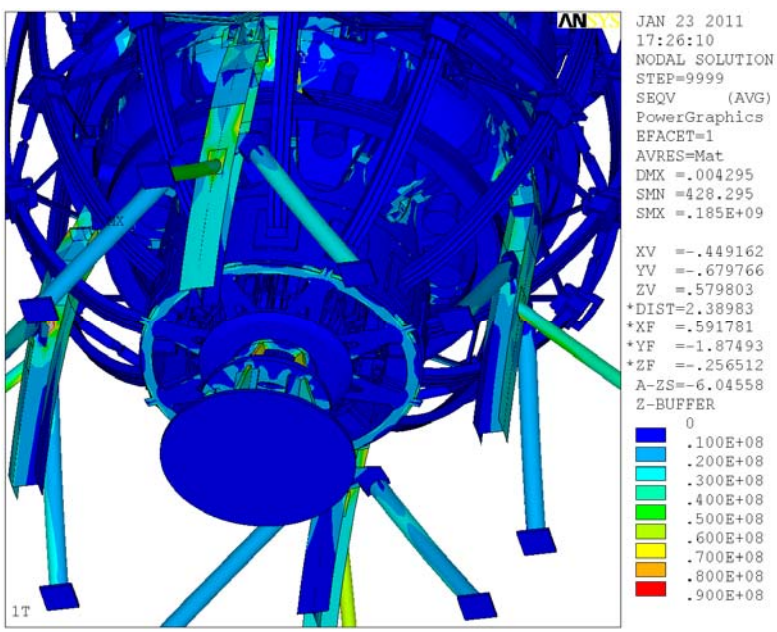

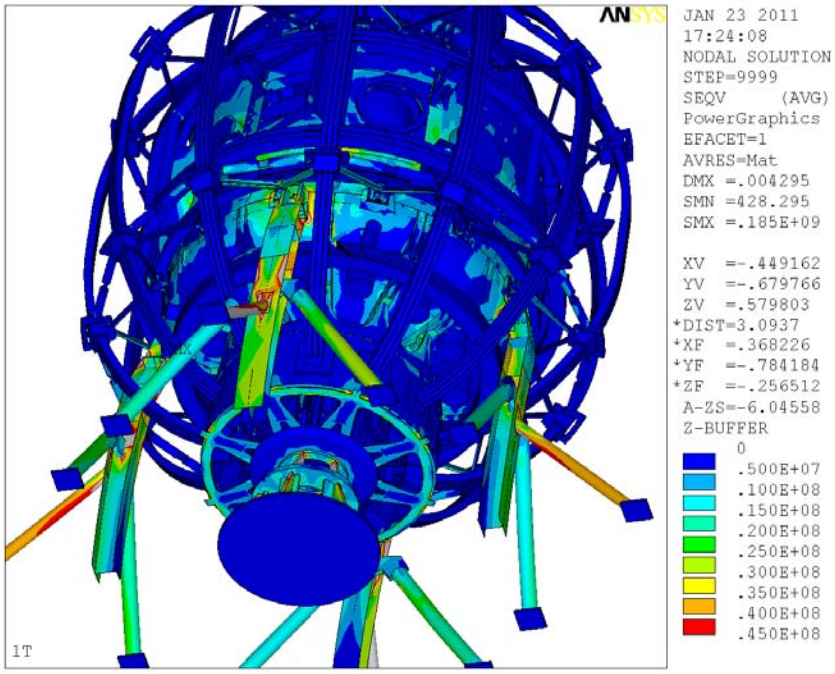

9.4 Bellows Stresses

The bellows are modeled as .030 inches thick. The geometry is consistent with the geometry recommended by Peter Rogoff in his bellows calculation [19]

Bottom Bellows Static .5g Lateral Analysis

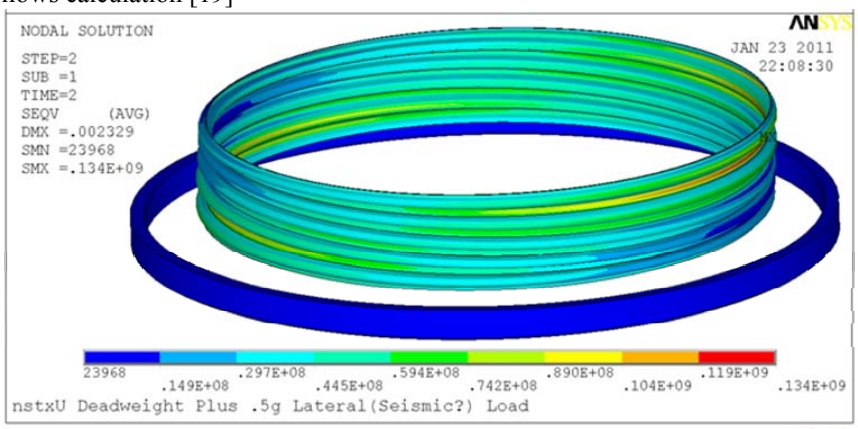

Bottom Bellows Modal Analysis

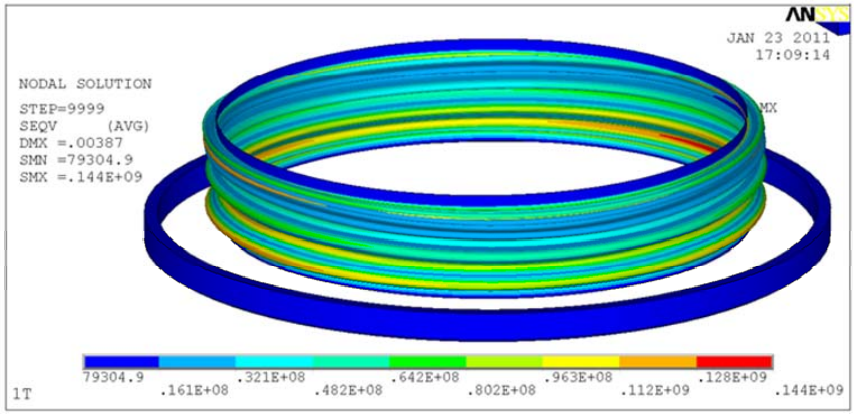

9.5 Coil Stresses

9.5.1 TF Coil Stresses

Coil Stresses are small due to a seismic event. The connection of the TF to the pedestal is effected by the global overturning moment. The total stress is less than 17 MPa.

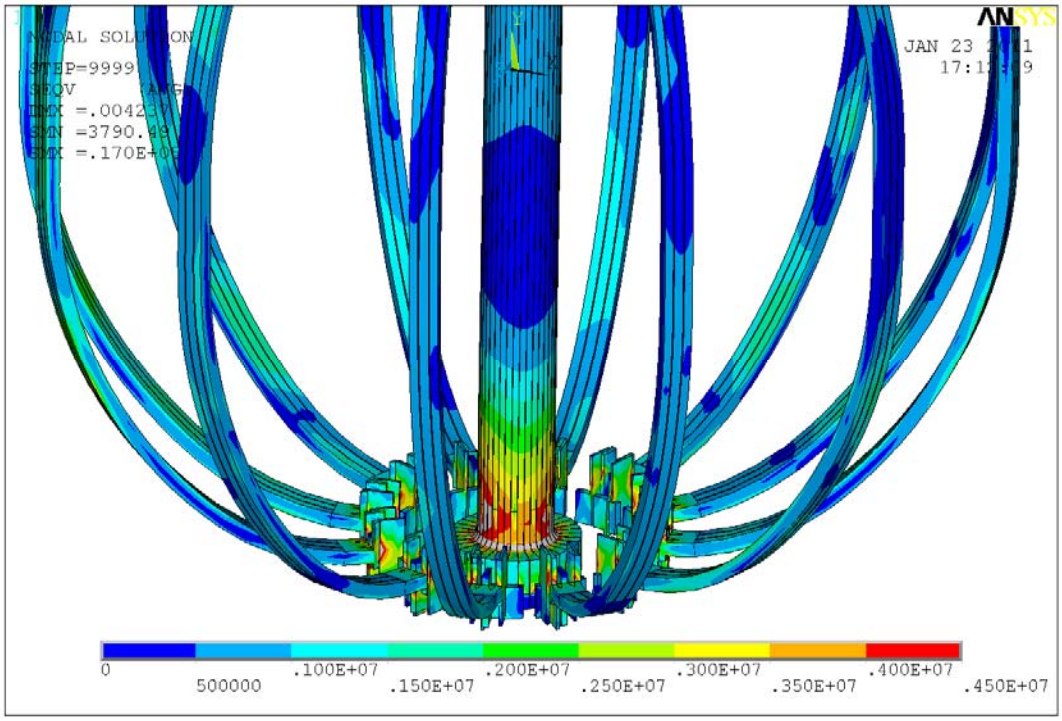

9.5.2 PF Coil Stresses

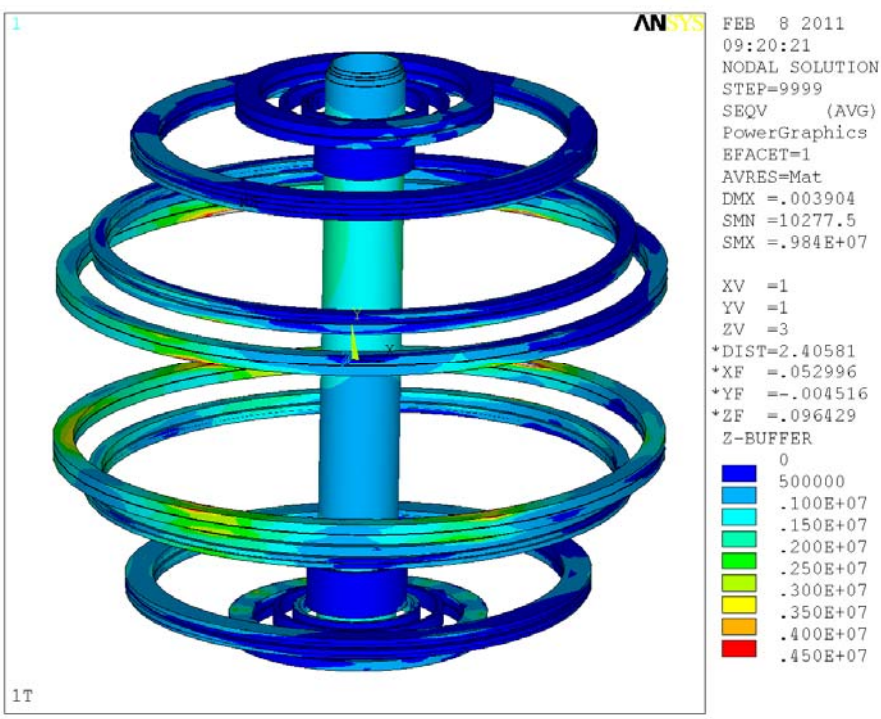

9.6 Aluminum Block Stresses

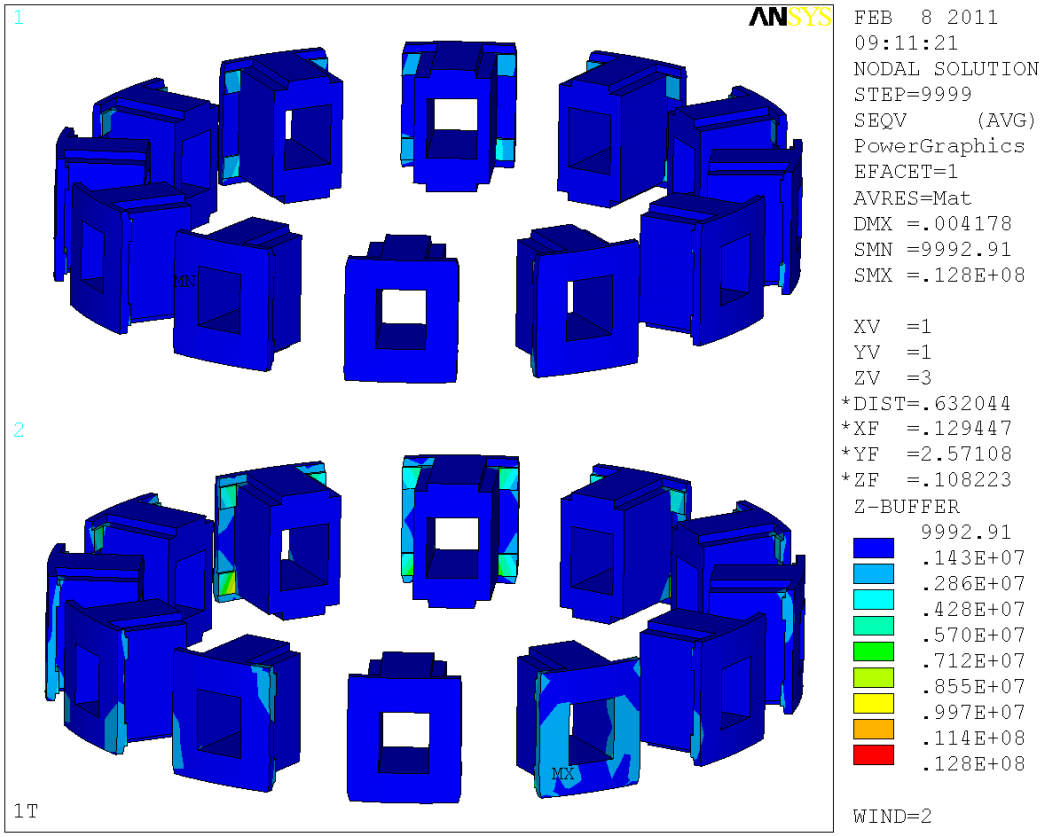

9.7 Umbrella Structure Stresses

9.7.1 Arch Reinforcements

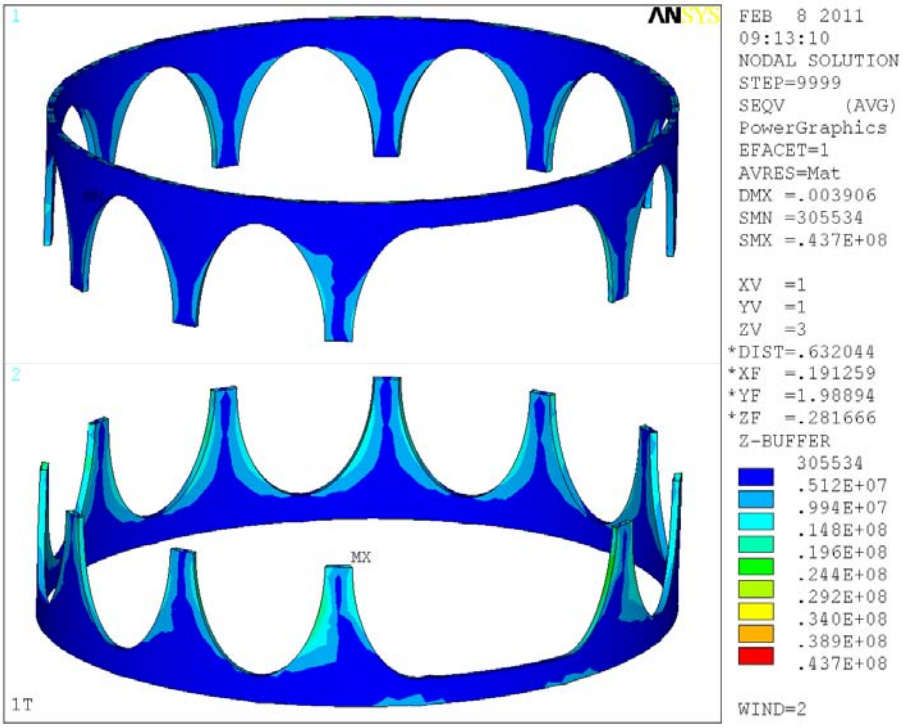

9.7.2 Spoked Lid

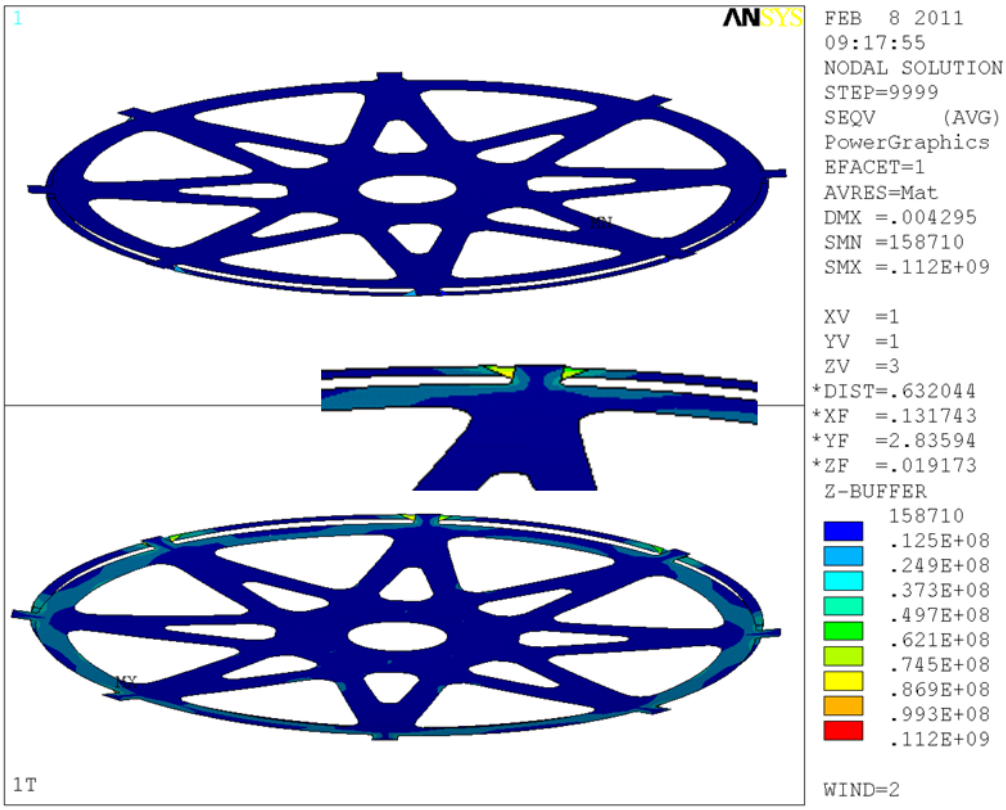

Spoke/lid Seismic Stress - Note: during our Wed meeting Feb 9 2011, Mark Smith indicated that the lower spoke assembly does not have the outer lugs, but has a complete bolted ring. Thus the stresses at the lower lugs shown above are not real.

9.8 Embedment/Hilti Loads

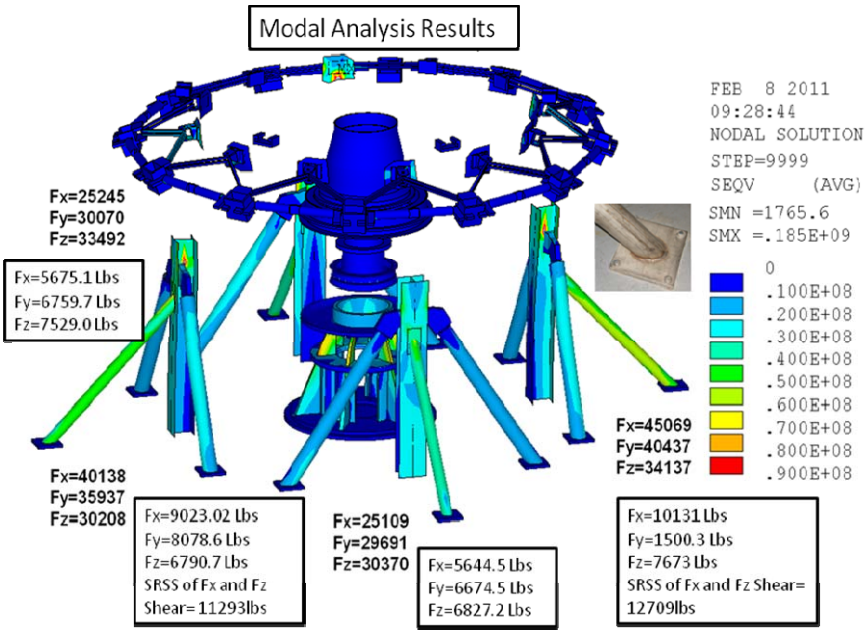

These are a bit higher than the static analysis results, Displacement results suggest that the modal response is mostly shear of the machine, and the static results shown in section 8.2, are mostly overturning. A shear design capacity of 13000 lbs and a tensile capacity of 9000lbs is recommended

10.0 Mode Shapes, and Frequencies

The lowest lateral translational mode is mode 3 at 7.9 hz or a period of .127 .

SIGNIFICANT MODE COEFFICIENTS (INCLUDING DAMPING)

MODE	FREQUENCY	DAMPING	SV	MODE COEF.
1	7.552	0.0000	7.0560	-0.2180
2	7.737	0.0000	7.0560	-0.5650
3	7.892	0.0000	7.0560	0.4051
4	19.11	0.0000	7.0560	0.4360E-01
5	19.46	0.0000	7.0560	-0.1304E-01
6	23.89	0.0000	6.3763	-0.5626E-02
7	23.94	0.0000	6.3687	-0.3525E-02
8	26.01	0.0000	6.0761	0.1780E-02
11	31.03	0.0000	5.4951	0.5901E-03
13	32.82	0.0000	5.3223	0.1096E-02

MODAL COMBINATION COEFFICIENTS

```
MODE=  1  FREQUENCY=     7.552  COUPLING COEF.=  1.000
MODE=  2  FREQUENCY=     7.737  COUPLING COEF.=  1.000
MODE=  3  FREQUENCY=     7.892  COUPLING COEF.=  1.000
MODE=  4  FREQUENCY=    19.111  COUPLING COEF.=  1.000
MODE=  5  FREQUENCY=    19.461  COUPLING COEF.=  1.000
MODE=  6  FREQUENCY=    23.894  COUPLING COEF.=  1.000
MODE=  7  FREQUENCY=    23.944  COUPLING COEF.=  1.000
MODE=  8  FREQUENCY=    26.007  COUPLING COEF.=  1.000
MODE= 11  FREQUENCY=    31.028  COUPLING COEF.=  1.000
MODE= 13  FREQUENCY=    32.819  COUPLING COEF.=  1.000
```

SRSS COMBINATION INSTRUCTIONS WRITTEN ON FILE file.mcom

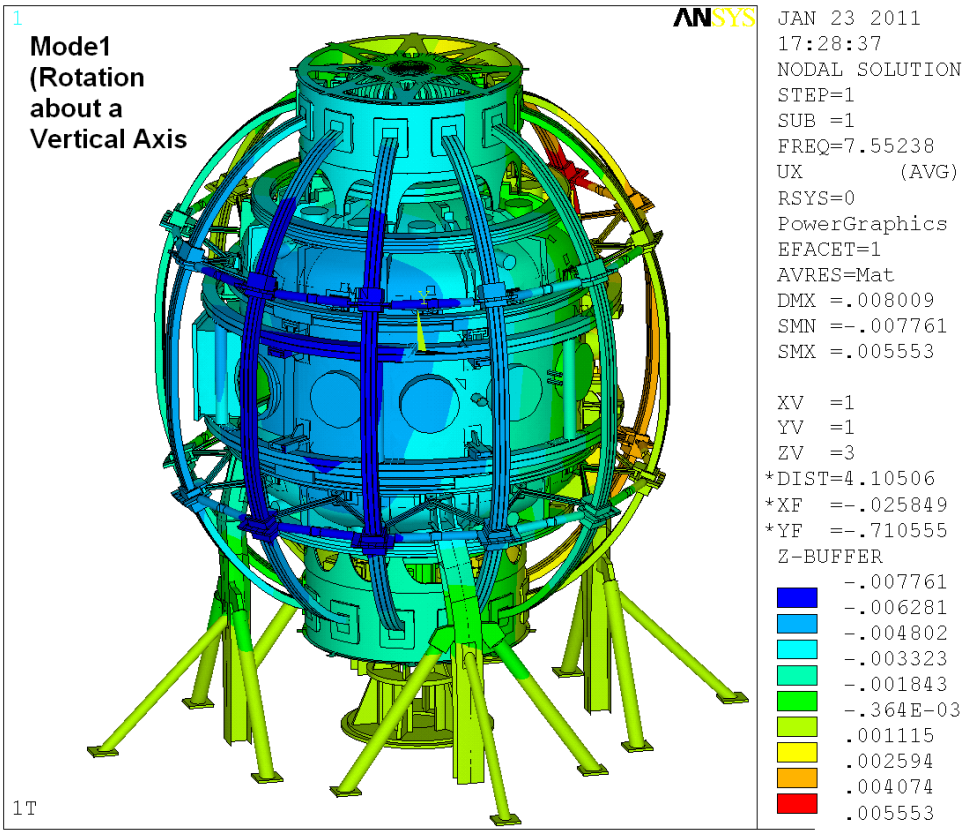
1
ANSYS
Mode1
(Rotation
about a
Vertical Axis
JAN 23 2011
17:28:37
NODAL SOLUTION
STEP=1
SUB =1
FREQ=7.55238
UX (AVG)
RSYS=0
PowerGraphics
EFACET=1
AVRES=Mat
DMX =.008009
SMN =-.007761
SMX =.005553
XV =1
YV =1
ZV =3
*DIST=4.10506
*XF =-.025849
*YF =-.710555
Z-BUFFER
-.007761
-.006281
-.004802
-.003323
-.001843
-.364E-03
.001115
.002594
.004074
.005553
1T

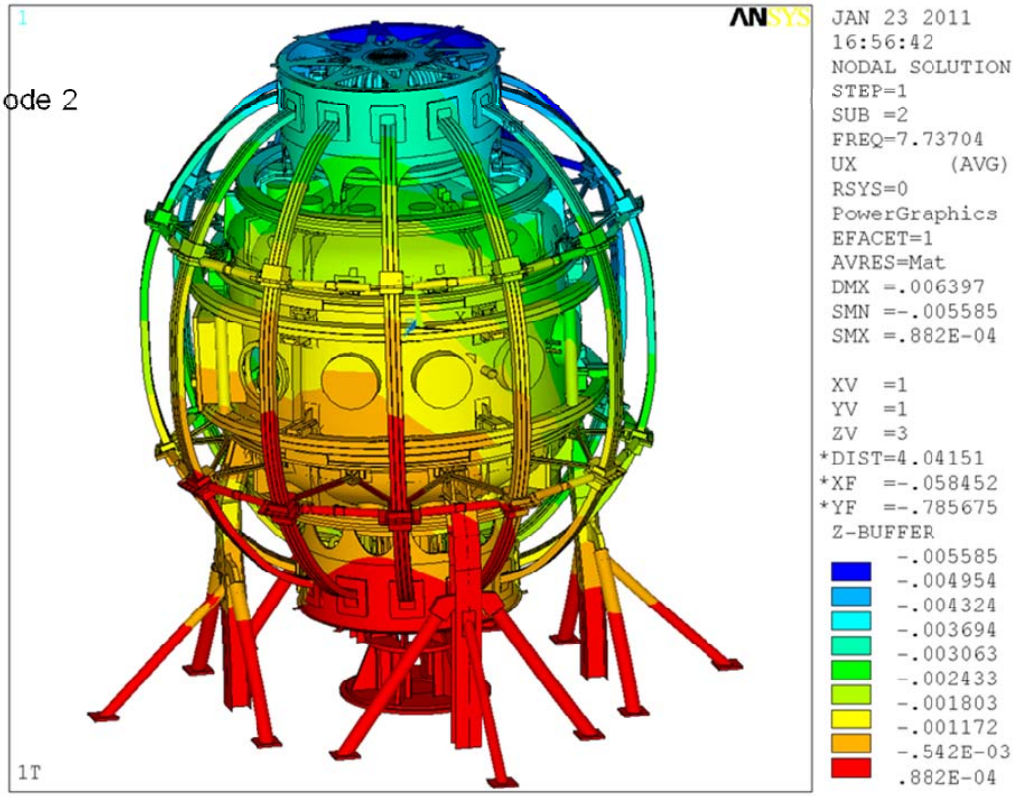
1
ANSYS
Mode 2
JAN 23 2011
16:56:42
NODAL SOLUTION
STEP=1
SUB =2
FREQ=7.73704
UX (AVG)
RSYS=0
PowerGraphics
EFACET=1
AVRES=Mat
DMX =.006397
SMN =-.005585
SMX =.882E-04
XV =1
YV =1
ZV =3
*DIST=4.04151
*XF =-.058452
*YF =-.785675
Z-BUFFER
-.005585
-.004954
-.004324
-.003694
-.003063
-.002433
-.001803
-.001172
-.542E-03
.882E-04
1T

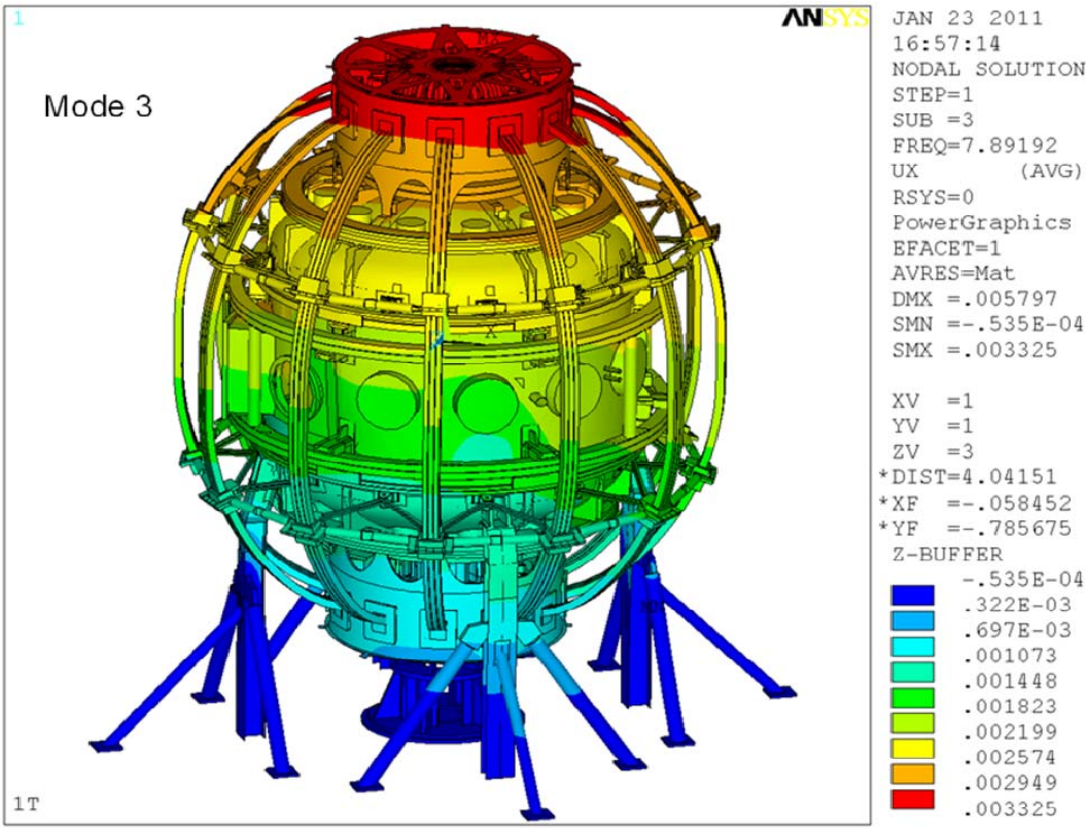
1
ANSYS
Mode 3
JAN 23 2011
16:57:14
NODAL SOLUTION
STEP=1
SUB =3
FREQ=7.89192
UX (AVG)
RSYS=0
PowerGraphics
EFACET=1
AVRES=Mat
DMX =.005797
SMN =-.535E-04
SMX =.003325
XV =1
YV =1
ZV =3
*DIST=4.04151
*XF =-.058452
*YF =-.785675
Z-BUFFER
-.535E-04
.322E-03
.697E-03
.001073
.001448
.001823
.002199
.002574
.002949
.003325
1T

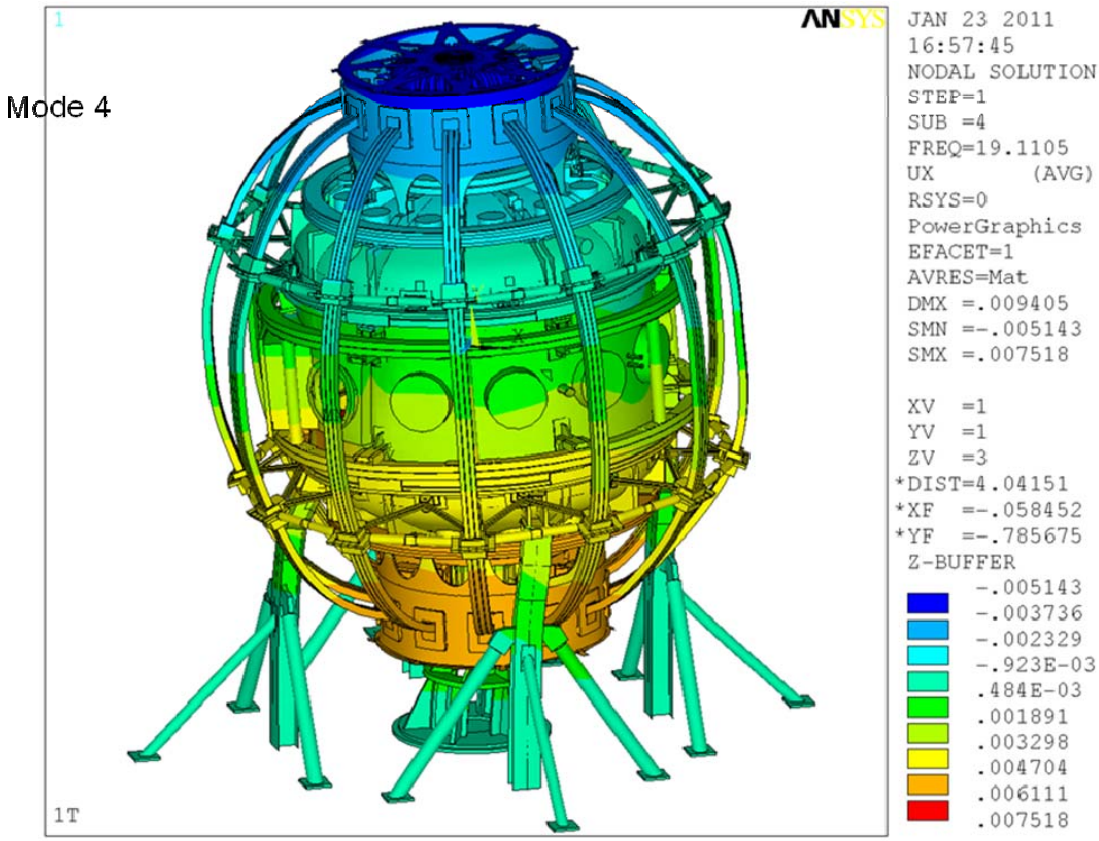
1
ANSYS
Mode 4
JAN 23 2011
16:57:45
NODAL SOLUTION
STEP=1
SUB =4
FREQ=19.1105
UX (AVG)
RSYS=0
PowerGraphics
EFACET=1
AVRES=Mat
DMX =.009405
SMN =-.005143
SMX =.007518
XV =1
YV =1
ZV =3
*DIST=4.04151
*XF =-.058452
*YF =-.785675
Z-BUFFER
-.005143
-.003736
-.002329
-.923E-03
.484E-03
.001891
.003298
.004704
.006111
.007518
1T

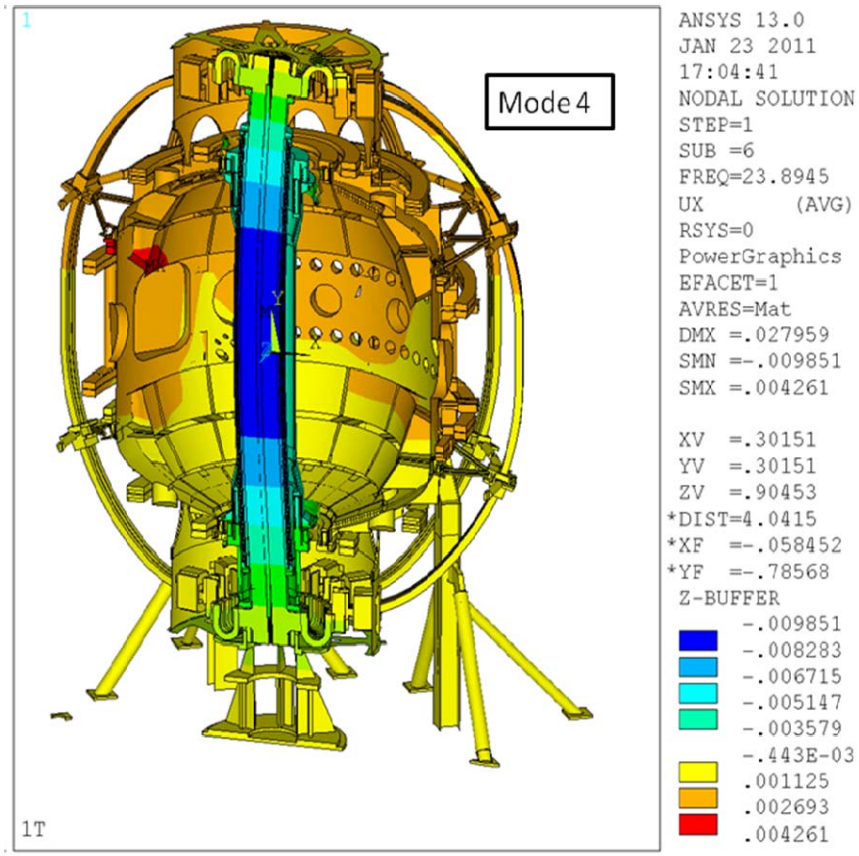
Mode 4
ANSYS 13.0
JAN 23 2011
17:04:41
NODAL SOLUTION
STEP=1
SUB =6
FREQ=23.8945
UX (AVG)
RSYS=0
PowerGraphics
EFACET=1
AVRES=Mat
DMX =.027959
SMN =-.009851
SMX =.004261
XV =.30151
YV =.30151
ZV =.90453
*DIST=4.0415
*XF =-.058452
*YF =-.78568
Z-BUFFER
-.009851
-.008283
-.006715
-.005147
-.003579
-.443E-03
.001125
.002693
.004261
1T

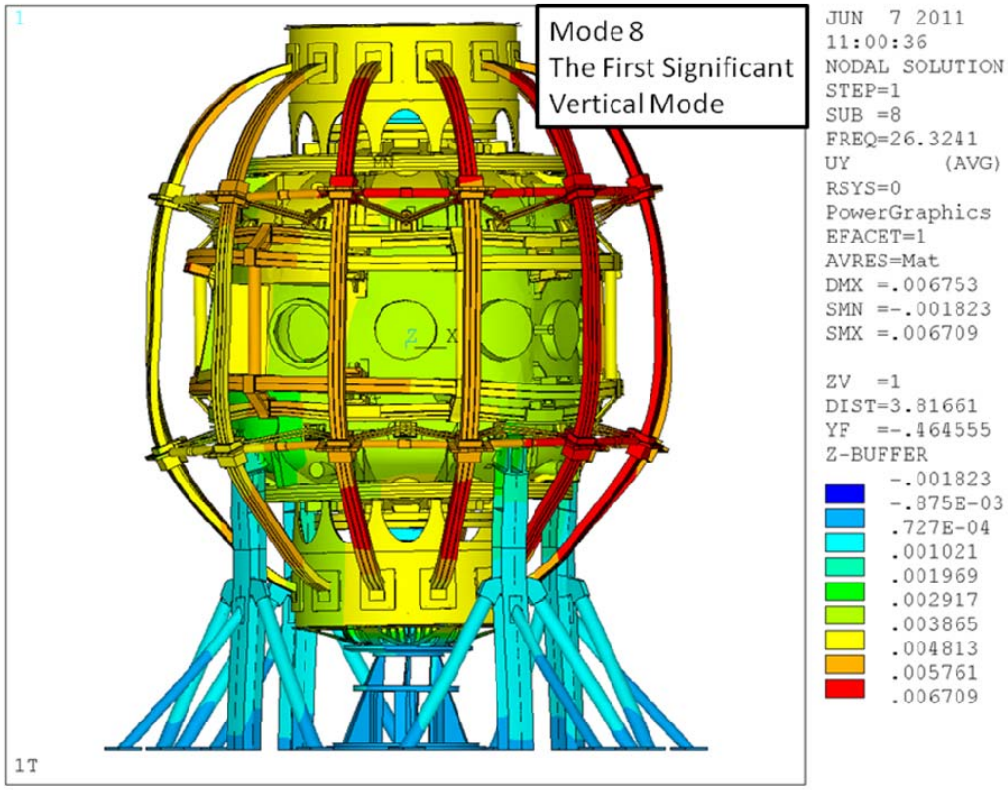
Mode 8
The First Significant
Vertical Mode
JUN 7 2011
11:00:36
NODAL SOLUTION
STEP=1
SUB =8
FREQ=26.3241
UY (AVG)
RSYS=0
PowerGraphics
EFACET=1
AVRES=Mat
DMX =.006753
SMN =-.001823
SMX =.006709
ZV =1
DIST=3.81661
YF =-.464555
Z-BUFFER
-.001823
-.875E-03
.727E-04
.001021
.001969
.002917
.003865
.004813
.005761
.006709
1T

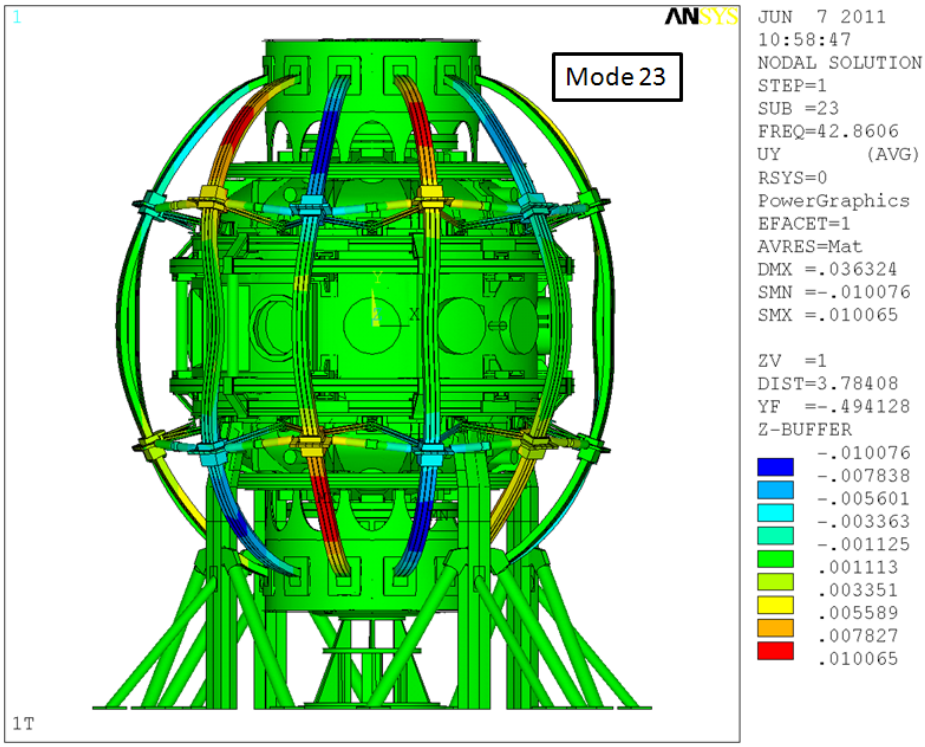
1
ANSYS
Mode 23
JUN 7 2011
10:58:47
NODAL SOLUTION
STEP=1
SUB =23
FREQ=42.8606
UY (AVG)
RSYS=0
PowerGraphics
EFACET=1
AVRES=Mat
DMX =.036324
SMN =-.010076
SMX =.010065
ZV =1
DIST=3.78408
YF =-.494128
Z-BUFFER
-.010076
-.007838
-.005601
-.003363
-.001125
.001113
.003351
.005589
.007827
.010065
1T

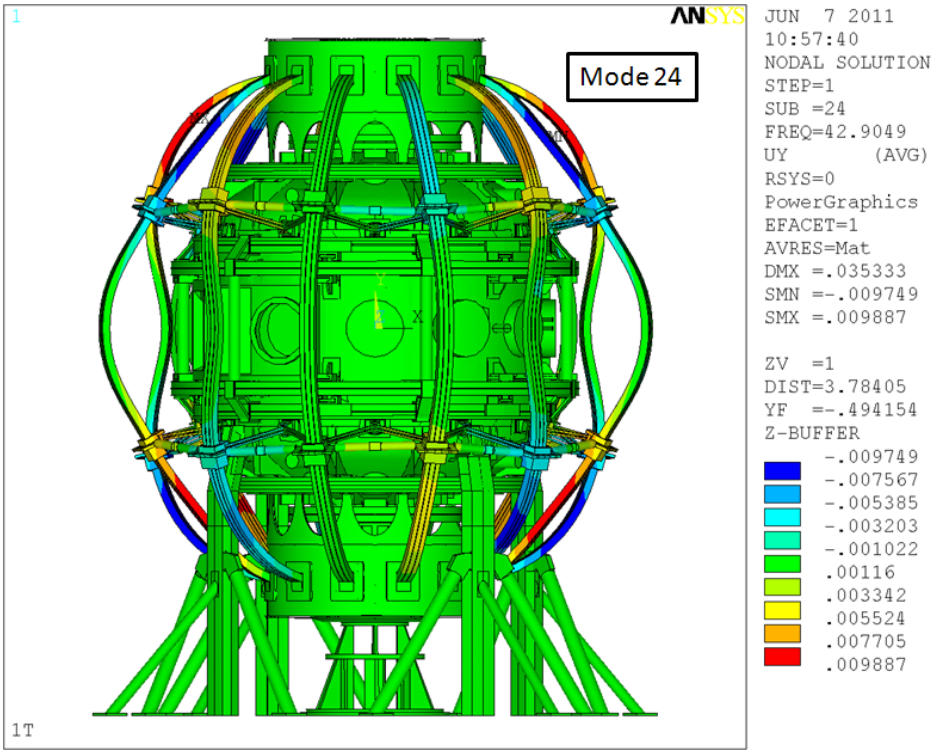
1
ANSYS
Mode 24
JUN 7 2011
10:57:40
NODAL SOLUTION
STEP=1
SUB =24
FREQ=42.9049
UY (AVG)
RSYS=0
PowerGraphics
EFACET=1
AVRES=Mat
DMX =.035333
SMN =-.009749
SMX =.009887
ZV =1
DIST=3.78405
YF =-.494154
Z-BUFFER
-.009749
-.007567
-.005385
-.003203
-.001022
.00116
.003342
.005524
.007705
.009887
1T

Atachment A

NSTX
SEISMIC DESIGN ANALYSIS REPORT

71-990611-JHC-01

Revision 00

June 11, 1999

Prepared By: James H. Chrzanowski

Douglas G. Loesser

Mike Kalish

Bob Parsells

Approved By: _____ Date: _____

Charlie Neumeyer
NSTX Engineering Project Head

Introduction

The mission of the National Spherical Torus Experiment (NSTX) is to assess the physics performance of the Spherical Torus (ST) concept, in which the aspect ratio (ratio of major radius (R_0) to minor radius (a), R_0/a is much lower than most machines built to date. Supporting objectives are to:

- Exploit techniques for non-inductive current drive and profile controls that are consistent with efficient continuous operation of a fusion reactor without a central solenoid.
- Maximize the use of existing facilities and components so as to minimize the cost of the project.

The purpose of this document is to describe the design criteria used to perform the seismic analysis on the NSTX components. A summation of the seismic analysis performed will also be discussed. The systems/components, which were analyzed/reviewed, include the south shield wall, north labyrinth, Neutral Beam box, NB High Voltage Enclosures (HVE), plus the vacuum vessel/structure. The analyses on the HVE's and shield wall were completed using ALGOR an analysis software package used for stress analysis.

DOE Directives for Characterizing Seismic Environment

The policy, requirements, and guidelines for NPH mitigation at DOE sites and facilities have been developed and established in numerous DOE Orders and Standards. The following DOE documents provide reference for characterizing seismic environment:

DOE-STD-1020-94, "Natural Phenomena Hazards Design and Evaluation Criteria for Department of Energy Facilities"

DOE-STD-1021-93, "Natural Phenomena Hazards PC Criteria for SSC's"

DOE-STD-1022-94, "Natural Phenomena Hazards Site Characterization Criteria"

DOE-STD-1023-92, "Natural Phenomena Hazards Assessment Criteria"

DOE-STD-1024-92, "Guidelines for Use of Probabilistic Seismic Hazards Curves at DOE Sites"

DOE-6430.1A, "General Design Criteria"

Design Criteria [1]

The NSTX torus structure has been designed to satisfy the Department of Energy (DOE) standard for natural phenomena hazard (NPH) events[2]. Only the effect of earthquake was considered for the NSTX torus structure. DOE requires the use of Performance Categories (PC) to specify the relative risk, environmental impact, importance, and cost of each facility. The assessment for seismic loading and evaluation for seismic response shall be followed to determine that the design of the structure is acceptable with respect to the performance goals[3]. There are no safety class items associated with the NSTX machine since its failure would not result in the release of significant quantities of hazardous materials. On this basis the seismic performance goal for NSTX torus structure is to maintain worker safety and it shall be placed in NPH Performance Category 1 (PC-1). Those structures, systems and components (SSC's) whose failure would adversely effect the performance of the NSTX torus structures or creates a threat to worker safety were placed in **PC-1**. All other systems were placed in **PC-0** and will thus have no seismic design requirements.

The DOE design criteria[5] allows the PC-1 SSC's to be designed using the simplified approaches specified in building code, such as Uniform Building Code (UBC)[4]. The NSTX torus structure shall be installed in the D-site Hot Cell. The seismic design considers the response to the motion of the machine floor rather than the ground motion. According to UBC code, static analysis approach may be used for determining the seismic effects. For PC-1 SSC's the design forces may be based on the total lateral seismic forces F_p given by UBC provisions:

$$\mathbf{F_p = Z\ I\ C_p\ W_P = 0.135\ W_p}$$

---

[1] NSTX General Requirements Document

[2] U.S. Department of Energy, "Natural Phenomena Hazards Performance Categorization Criteria for Structures, Systems, and Components', DOE-STD-1021-93, July 1993

[3] U.S. Department of Energy, "Natural Phenomena Hazards Design and Evaluation Criteria for Department of Energy Facilities", DOE-STD-1020-934 April 1994

[4] 'Uniform Building Code', 1991 Edition, International Conference of Building Officials, Whittier, CA 1991

Where:

F_p = lateral seismic forces
Z = a seismic zone factor.
I = an importance factor.
C_p = a horizontal force factor.
W_p = the weight of element or component

"Z" seismic zone factor: was determined using table 3 of DOE-STD-1024-92 "Probabilistic Hazard Results for DOE sites.
For PPPL, Z = 0.09 g[5]

"I" importance factor: for PC-1, was determined using tables 23-K and 23-L of the Uniform Building Code (UBC)
For PC-1, I = 1.00

"Cp" horizontal force factor: = **(1.5) for non-rigid elements**
= (2.0) for cantilevered walls
As determined by DOE-STD-1020-94 (2.4.1) and UBC table 23-P

The lateral force shall be distributed in proportion to the mass distribution of the machine. Forces shall be applied in the horizontal directions that result in the most critical loadings for design.

NSTX conventional facilities were designed in accordance with DOE 6430.1A General Design Criteria and applicable national codes referenced therein.

Seismic Analysis of NSTX Components

<u>NSTX Vessel and Supporting Structure:</u> (calculations by John Spitzer)

- For the NSTX vacuum vessel and structure, a comparison of the total lateral force due to seismic events, F_{ot} (defined below) verses the necessary uplifting and

[5]U.S. Department of Energy, "Guidelines for Use of Probabilistic Seismic Hazard Curves at Department of Energy Sites", DOE-STD-1024-92 December, 1992

overturning force (Fr) due to the vessel structure weight & supporting base was made.

Fs= Z* I * Cp * Wp
Fot= (1.414) (0.09) (1.0) (1.5) Wp * 156.0
Fot= 29.8 Wp

Fr= Wp * 146 * 0.707/2= 51.6 Wp

51.6 Wp> 29.8 Wp

Reference:

- Estimated weight of vacuum vessel & supporting structure: WP= 150,000 lbs.
- Necessary force to overturn the vacuum vessel: FOT= 35,100 lbs.
- FP= 20,250 lbs.

- It can be demonstrated that the reaction resulting from vessel weight and support base (WP) can not be exceeded by an excitation caused by seismic excitation. This is without consideration of the attachment strength between vessel and support structure.

NSTX NB enclosure: (calculations by Bob Parsells)

The Neutral Beam enclosure is supported off the NSTX Test Cell floor with four stainless steel support legs to align the mid-plane of the vacuum vessel with the Neutral Beam nozzle. These supports are 51 inches tall and must support the 87 tons of weight from the beam enclosure.

Reference:

- Estimated weight of the Neutral Beam enclosure: WP= 87 tons
- Support is located 51 inches off the ground (8 in. x 8 in. box beam supports)
- Necessary force to overturn the NB enclosure: FOT= 58,000 lbs.

- The NSTX vessel would require a seismic excitation of approximately **70%**

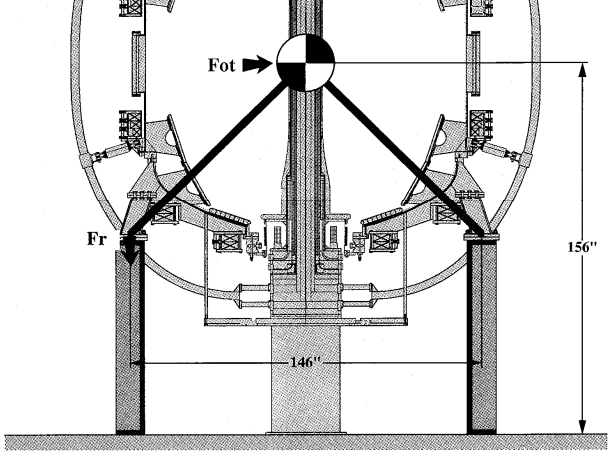

Results

- **The bendi are increased by approxima (this represents approxima**
- **The maxir ion is 23,490 lbs. (13.5% Wp**

24-020199-01
Neutral Beam Box

<u>NSTX High Voltage enclosures:</u> (calculations by Doug Loesser)

Reference:

- Estimated weight of the HVE: WP= 24,000 lbs.
- Bottom of cylinder is located 16 inches off the ground (8 in. x 8 in. box beam supports)
- Four support legs @ 5 inch diameter w/ /2 in. wall
- Height of HVE: 192 inches high,
- Diameter of HVE: 72 inch diameter
- MPE seismic load is 13.5% of component weight (FP= 3,240 lbs.)

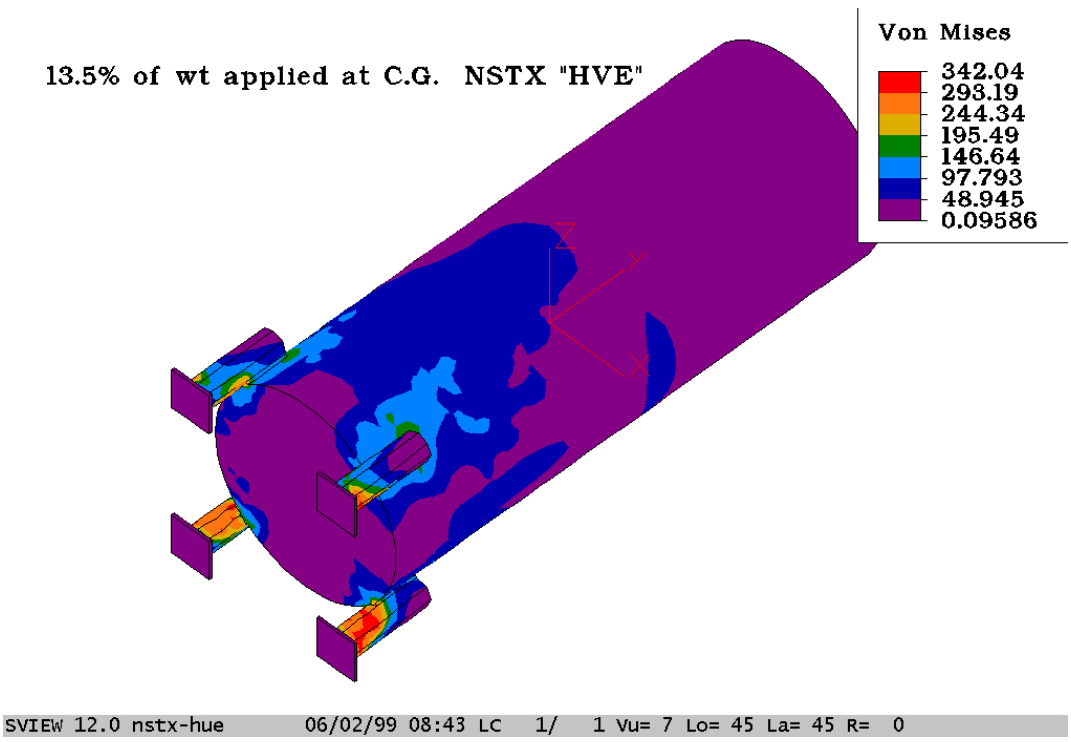

Results

- **Resultant stresses due to seismic load < 350 psi (*This represents approximately 10% of the allowable)***

- **Necessary force to overturn the HVE: FOT= 8157 lbs.**

Attachment B

NCSX
Specification

Seismic Requirements for NCSX

NCSX-CRIT-SEIS-00

Draft B

17 May 2004

Prepared by:

_____

M. Kalish

Concur:

_____

R. Parsells

Concur:

_____

W. Reiersen, Engineering Manager

Concur:

_____

J. Levine, ES&H

Approved by:

_____

G. H. Neilson, NCSX Project Manager

Controlled Document

This is a controlled document. Check the NCSX Engineering Web prior to use to assure that this document is current.

Record of Revisions

Revision	Date	ECP	Description of Change
Rev. 0		**-**	

TABLE OF CONTENTS

1 Scope 40
2 Applicable Documents 40
3 Summary 40
3.1 Simplified Static Analysis 41
4 Detailed PPPL Code interpretation 43
4.1 Structures (Buildings) (Section 1617.4 of IBC 2000 applies) 44
4.2 Non Buildings supported by other structures (Section 1621 of IBC 2000 applies) 45
4.3 Buildings with self supporting structures (supported at grade) 46
4.4 Rigid Non Building Structures (supported at grade) 47
4.5 Dynamic Analysis 48
Appendix A – Applicable tables from the IBC 2000 50

Scope

This memo summarizes and interprets the Department of Energy requirements for the NCSX Project with respect to seismic loading. First a simplified static analysis and its applicability is presented for use. Following is a more thorough analysis of the pertinent requirements and how they apply to the design of equipment and components in the NCSX Test Cell.

Applicable Documents

International Building Code 2000
DOE-STD-1020-2002 Natural Phenomena Hazards Design and Evaluation Criteria for Department of Energy Facilities
NCSX Structural Design Criteria
C Site Drawing Subgrade Profiles 330-101-1-G3
Soils Foundation Investigation TFTR PPPL, Giffels Associates 12/9/76

Summary

Based on applications of DOE Order O420.1A and DOE Guide G420.1-2, PPPL is required by the Department of Energy to meet the seismic requirements of DOE-STD-1020-2002 Performance Category 1 for Seismic Use Group I. Interpretation of these requirements leads to the adoption of the International Building Code, IBC 2000, with 2/3 the Maximum Considered Earthquake (MCE, site specific) as the standard for PPPL.

The primary intent of the IBC 2000 is to provide for the protection of the public in the event of an earthquake. The NCSX facility is not a public facility and as a result interpretation of the IBC 2000 allows for a relaxed seismic requirement for the PPPL / NCSX test cell. Seismic analysis of components and equipment in the test cell if they do not pose a threat to the health and welfare of the public is not required by code (see section 1621.1.1 of IBC 2000). The NCSX project however chooses to as a minimum apply the requirements of IBC 2000 to components and equipment in the test cell which pose a hazard to any personnel (not just the public) in the event of an earthquake.

The analysis technique presented below is the result of discerning from the code the applicable factors and coefficients and distilling the information down to a simple static analysis applicable to the NCSX test cell. This analysis is to be applied when the equipment or component in question can pose a physical hazard to the health and welfare of an employee or the public. For components that do not present a hazard (equipment mounted to the floor with no potential of falling on and injuring an employee is one example) no seismic analysis is required.

This is the minimum standard. Over and above this minimum standard the remaining body of this document interprets the applicable sections of the code for NCSX and may be applied as required by the project to ensure some level of operability of the

NCSX device after a seismic event. Section 4.2 of the memo, "Non Buildings Supported by Other Structures" contains the code interpretation from which this simplified static analysis was derived. For complex high value systems a dynamic analysis is recommend to more accurately reflect the seismic loading and provide the basis for a sound structural design.

Simplified Static Analysis

The following is the static seismic criteria required for components, structures and equipment in the NCSX test cell which pose a moderate to high fire, explosive, or physical, hazard to personnel. The loads prescribed below are to be applied at the center of gravity of the component in question. If stresses and deflections of components are within acceptable limits as described in the "NCSX Structural Design Criteria" document the component is seismically qualified.

For Rigid Equipment and Components in the NCSX Test Cell mounted to the test cell floor and made of steel or other metal material the seismic criteria is:

Fp = .108 x Wp

For Rigid Equipment and Components in the NCSX Test Cell mounted to the test cell floor which contain brittle material such as ceramic or glass in a load bearing path use:

Fp = .128 x Wp

For Non-Rigid (flexible) Equipment and Components in the NCSX Test Cell mounted to the test cell floor and made of steel or other metal material the seismic criteria is:

Fp = .171 x Wp

For Non-Rigid (flexible) Equipment and Components in the NCSX Test Cell mounted to the test cell floor which contain brittle material such as ceramic or glass in a load bearing path use:

Fp = .257 x Wp

If the component in question is not mounted to the test cell floor the seismic load must be adjusted as follows:
Fp (at height) = Fp x (1+.0246∗h)
Where h is the height at which the component is mounted above (or minus the height for below) the test cell floor in Feet.

If the subject component or equipment does not present the potential for a physical hazard during an earthquake but a seismic analysis is performed to meet other project objectives (component survivability) Fp may be reduced by a factor of 2/3rds
Fp(low hazard) = Fp x 2/3

Rigid structures are structures whose natural frequency (Fn) is greater than 16.7 hz
Fn = 1 / (2*π(Wp / K.p *g)^.5)
g = Acceleration of gravity
K.p = Stiffness of the component and attachment in terms of load per unit deflection at the center of gravity
If there is a question as to the rigidity of the component it may be more efficient to use the higher seismic requirement for non-rigid components and avoid calculating the components rigidity

Dynamic analysis is always available and should use the ARS from section 4.5 of this memo applied at the base (ground) level and an amplification factor of **(1 + 2∗z/h)=1.48** (see section 4.2) at the test cell floor level

Detailed PPPL Code interpretation

DOE requires PPPL to meet the requirements of **DOE-STD-1020-2002**

The laboratory is required to meet **Performance Category 1** (PC-1) and **Seismic Use Group I** per section 2.3.1 of DOE-STD-1020-2002.

Performance Category 1 allows use of the **IBC 2000** with **2/3 the Maximum Considered Earthquake (MCE)**. (2% exceedance probability in 50 years)

IBC 2000

We are **Site Class B** (table 1615.1) based on soil shear wave velocity of 2,500 ft/sec < V.s <5,000 ft/sec. The Site Class B designation is based upon C Site Drawing "Subgrade Profiles 330-101-1-G3" which shows the bottom of the basement slab and piers to be bellow the as measured level of solid rock. In addition the memo entitled Soils Foundation Investigation TFTR PPPL, Giffels Associates 12/9/76 shows shear wave velocities of greater than 2,500 ft/sec for bores at depths similar to and near the C Site Basement foundation and shear wave velocities greater than 2,500 ft/sec for solid rock.

For our longitude and latitude and Site Class B an MCE Ground Motion Curve is generated using the maps in section 1615 of IBC2000

S.s = 36.0% **The mapped spectral acceleration for short periods**
S.1 = 8.5% **The mapped spectral acceleration for a 1 second period**

Now the seismic input is adjusted for Site Coefficients

Fa=1 Site coefficient as a function of site class and mapped acceleration for short periods Table 1615.1.2(1)
Fv=1 Site coefficient as a function of site class and mapped acceleration at 1 sec periods Table 1615.1.2(2)

Sms = Fa ∗ Ss = .36 Adjusted MCE Parameter short periods Equation 16-16
Sm1 = Fv ∗ S1 = .085 Adjusted MCE Parameter 1 sec. period Equation 16-17

Sds = 2/3∗Sms = .24 **Five percent damped spectral response acceleration at short periods** Equation 16-18
Sd1 = 2/3∗Sms = .057 **Five percent damped spectral response acceleration at short periods** Equation 16-19

We are **Seismic Design Category B** (per Table 1616.3)
The Sds and Sd1 values become the basis for the following static and dynamic analysis of:
0 Structures (Buildings)
0 Non Buildings supported by other structures
0 Non Buildings with self supporting structures
0 Rigid Non Building Structures
0 Dynamic Analysis

Structures (Buildings) (Section 1617.4 of IBC 2000 applies)

For Seismic Use Group I and Seismic Design Category B (Sec. 1616.6.2) a static seismic calculation is acceptable for building-structures. This section generally applies to new construction and for NCSX is appropriate for building / additions or the constructions of walls or the addition of rooms.

V= Cs∗W Equation 16-34
Cs = Sds / (R / Ie) Equation 16-35

V is the Seismic Base Shear
W is the effective weight of the structure including dead load and other loads as listed in 1617.4.1
Ie = Occupancy Importance Factor per section 1616.2 and Table 1604.5, Ie=1
R = Response modification factor from Table 1617.6

V = (.24 / R) W

Note:
V need not exceed V = (.057∗Ie∗Wp) / (R∗T) Equation 16-36
V shall not be less than V = .011∗Ie∗Wp Equation 16-37
where T is the fundamental period of the building (section 1617.4.2.1)

For the vertical distribution of the seismic load use Equation 16-41:
Fx=Cvx∗V
Fx = The base shear at height
Cvx = (Wx Hx) / Sum (W∗H)

The ratio of the weight times the height to the total weight times the total height
Basement Elevation = 0’
Test Cell Elevation = 13’3”
Top of Steel = 55’

Non Buildings supported by other structures (Section 1621 of IBC 2000 applies)

A static seismic analysis is acceptable for structures supported by other structures (other structures can mean the building itself) such as piping or HVAC equipment, conduits, cable trays, and pressure vessels. This section is most appropriate for components and equipment installed in the test cell. This section accounts for the height of the component in question within the building or structure. If the non building structure weight exceeds the combined non building structure and building weight by more than 25% than this section does not apply, use section 1622.1.1 (see 4.3) Note: NCSX qualifies as **Design Category B which allows non building structures supported by other structures to be exempt from analysis if they fall within Ip=1 (non-hazardous equipment)** see section 1621.1.1

For hazardous equipment when Ip > 1 use the following
Fp = .4∗a.p∗Sds∗Wp∗(1 + 2∗z/h) / (Rp / Ip) Equation 16-67

Fp = the seismic force centered at the center of gravity of the component
Wp = component operating weight
a.p = component amplification select from table 1621.2 or 1621.3
For rigid structures whose natural frequency (Fn) is greater than 16.7 hz use a.p = 1 (ref. commentary Figure 1621.1.4)
For non rigid structures use a.p = 2.5
Fn = 1 / (2*π(W.p / K.p *g)^.5) Component Natural Frequency (1621.3.2)
g = Acceleration of gravity
K.p = Stiffnes of the component and attachment in terms of load per unit deflection at the center of gravity
Rp = Component response modification factor select from table 1621.2 or 1621.3, Represents the ability of a component to sustain permanent deformations without losing strength (= 2.5 for most components includes steel and copper , = 1.25 for low deformability elements such as ceramic, glass, or plain concrete)
z = Height in structure above base at point of attachment of component (height above grade)
h = Average roof height of structure relative to the base elevation
Ip = 1 for non hazardous equipment and 1.5 for hazardous equipment or life safety equipment required to function after an earthquake, from section 1621.1.6

Fp = .096∗a.p∗Wp∗(1 + 2∗z/h)∗Ip / Rp
With Basement Elevation = 0’
Test Cell Elevation = 13’3”
Top of Steel = 55’

For the Test Cell Floor z/h = .24

Simplified for the Test Cell:
Fp = Sc∗Ip∗Wp
Where Seismic Coefficient **Sc** Equals:

	Low Deformability Rp=1.25	Limited Deformability Rp=2.5
Rigid Structures a.p = 1 (Fn≥16.7 hz)	**.114**	**.072** (Calculated=.057 but reverts to min. value)
Non Rigid Structures a.p = 1.5 (Fn<16.7 hz)	**.171**	**.085**

For heights above the Test Cell Floor
Where h = feet above the Test Cell Floor
Fp = Sc∗Ip∗(1+.0246∗h)∗Wp

Note:
Fp shall be no greater than Fp = .38∗Ip∗Wp
Fp shall not be less than Fp = .072∗Ip∗Wp

For most applications on NCSX Ip=1. Exceptions include equipment or structures which present a physical hazard to personnel during an earthquake or equipment that holds flammable or explosive materials for which Ip=1.5.

Buildings with self supporting structures (supported at grade)

A static seismic analysis is acceptable for self supporting components and equipment such as tanks and vessels. This section is appropriate for equipment and structures supported at the ground or fastened to the base foundation (in our case the Test Cell Basement). For equipment, structures or components installed at elevated levels refer to 4.2 **"**Non Buildings supported by other structures". If the structure is rigid it is advantageous to use the exceptions allowed for "Rigid" components to simplify the analysis (see 4.4)
Section 1622.2 of IBC 2000 applies

The basis for this analysis is the same as Section 1617.4.1 (see "4.1" above). It is allowable for self supporting components to divide the shear force V by1.4 if an "allowable stress" criteria is being used for acceptance. For example it is acceptable to use V/1.4 if the acceptance criteria is for the stress not to exceed 2/3 yield.

V= Cs∗W Equation 16-34
Cs = Sds / (R / Ie) Equation 16-35
V is the Seismic Base Shear

W is the effective weight of the structure including dead load and other loads as listed in 1617.4.1
I = Importance factor Table 1622.2.5(2)
I=1.00 for low explosion, fire, and physical hazard risk
I=1.25 moderate explosion, fire, and physical hazard risk
I=1.50 high explosion, fire, and physical hazard risk
R = Lesser of Tables 1617.6 and 1622.2.5 but shall not exceed 3

V = (.24 / R)∗I∗W
Or
V = (.17 / R))∗I∗W when using allowable stress criteria
Note:
V need not exceed V = (.057∗I∗Wp) / (R∗T) Equation 16-36
V shall not be less than V = .034∗I∗Wp Equation 16-75
where T is the fundamental period of the building (section 1617.4.2.1)

Rigid Non Building Structures (supported at grade)

For Rigid Non Building structures supported at grade (Test Cell Basement Floor) a simplified static analysis is allowed. This section is applicable for a wide range of components whose stiffness is such that they will not couple with the low frequency vibrations due to an earthquake. As a result the force applied is much lower and dampening factor R need not be considered. It is allowable for self supporting components to divide the shear force V by1.4 if an "allowable stress" criteria is being used for acceptance. For example it is acceptable to use V/1.4 if the acceptance criteria is for the stress not to exceed 2/3 yield.
Section 1622.2.6 of IBC 2000 applies.

The following criteria apply to components whose natural frequency is greater than 16.7 hz:
V = .3∗Sds∗W∗I Equation 16-77

V = The total design lateral seismic base shear force applied to the non building structure
W = Operating weight
I = Importance factor Table 1622.2.5(2)
I=1.00 for low explosion, fire, and physical hazard risk
I=1.25 moderate explosion, fire, and physical hazard risk
I=1.50 high explosion, fire, and physical hazard risk

V = .072∗I∗W
V = .051∗I∗W when using allowable stress criteria

Dynamic Analysis

It may be desirable to use a dynamic analysis:

- For components or systems that do not fall into a clear category
- When a dynamic analysis offers relief in lower required seismic inputs (for example if the component does not fall into a well defined category the selection of most conservative selection of "R" leads to high static base shear inputs)
- For complex systems where a dynamic analysis is necessary for accurately determining failure modes during a seismic event.

The following is the IBC 2000 ground level seismic input for the Maximum Considered Earthquake at PPPL with Site Class Soil considerations taken into account. The input is given with and without 5% dampening. Per DOE STD-1020-2002 we are to use the 5% dampened seismic input (2/3 Sds and 2/3 Sd1). Section 1618 of IBC 2000 applies.

	Spectral Acceleration, g	
Period, Sec	**MCE**	**5% Damped MCE**
0.00	0.144	0.096
0.05	0.360	0.240
0.20	0.360	0.240
0.24	0.360	0.240
0.30	0.284	0.189
0.40	0.213	0.142
0.50	0.170	0.113
0.60	0.142	0.095
0.70	0.122	0.081
0.80	0.106	0.071
0.90	0.095	0.063
1.00	0.085	0.057
1.10	0.077	0.051
1.20	0.071	0.047
1.30	0.065	0.043
1.40	0.061	0.041
1.50	0.057	0.038
1.60	0.053	0.035
1.70	0.050	0.033
1.80	0.047	0.031
1.90	0.045	0.030
2.00	0.043	0.029

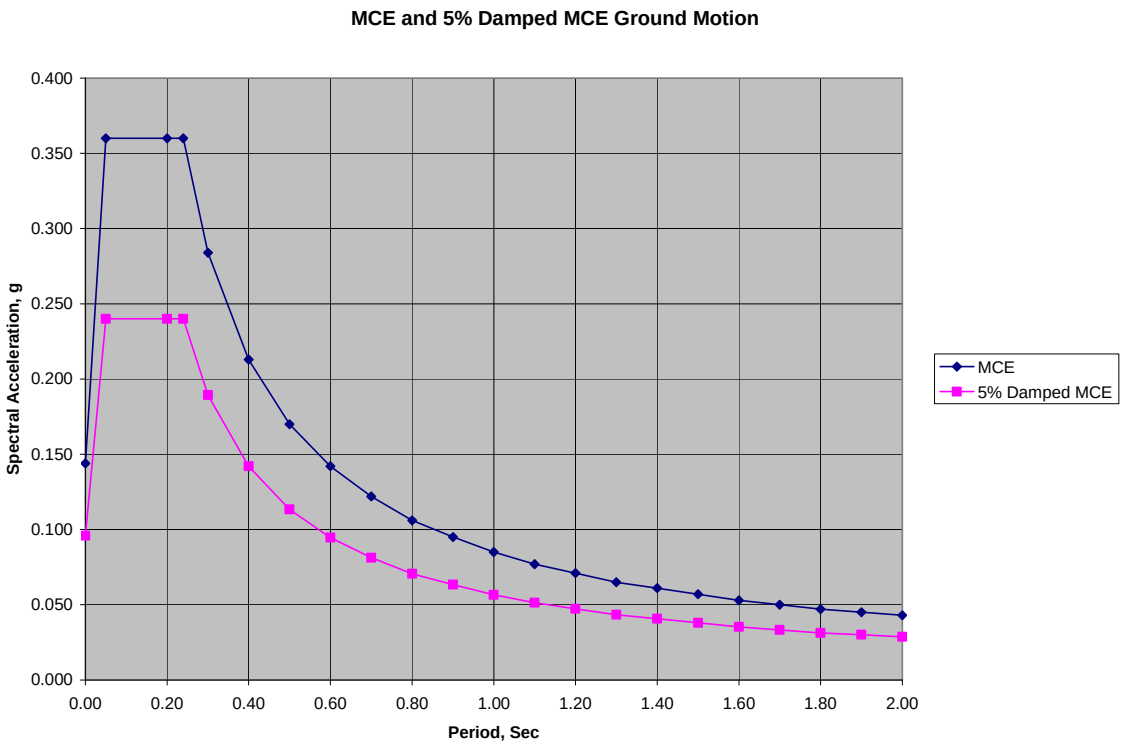
MCE and 5% Damped MCE Ground Motion
Spectral Acceleration, g
0.400
0.350
0.300
0.250
0.200
0.150
0.100
0.050
0.000
0.00
0.20
0.40
0.60
0.80
1.00
1.20
1.40
1.60
1.80
2.00
Period, Sec
MCE
5% Damped MCE

Appendix A – Applicable tables from the IBC 2000

TABLE 1617.6
DESIGN COEFFICIENTS AND FACTORS FOR BASIC SEISMIC-FORCE-RESISTING SYSTEMS

BASIC SEISMIC-FORCE-RESISTING SYSTEM	DETAILING REFERENCE SECTION	RESPONSE MODIFICATION COEFFICIENT, R[a]	SYSTEM OVER-STRENGTH FACTOR, Ω_0[g]	DEFLECTION AMPLIFICATION FACTOR, C_d[b]	SYSTEM LIMITATIONS AND BUILDING HEIGHT LIMITATIONS (FEET) BY SEISMIC DESIGN CATEGORY[C] AS DETERMINED IN SECTION 1616.3				
					A or B	C	D[d]	E[e]	F[e]
1. Bearing Wall Systems									
A. Ordinary steel braced frames	(14)[j] 2211	4	2	3½	NL	NL	160	160	160
B. Special reinforced concrete shear walls	1910.2.4	5½	2½	5	NL	NL	160	160	160
C. Ordinary reinforced concrete shear walls	1910.2.3	4½	2½	4	NL	NL	NP	NP	NP
D. Detailed plain concrete shear walls	1910.2.2	2½	2½	2	NL	NP	NP	NP	NP
E. Ordinary plain concrete shear walls	1910.2.1	1½	2½	1½	NL	NP	NP	NP	NP
F. Special reinforced masonry shear walls	2106.1.1.5	5	2½	3½	NL	NL	160	160	100
G. Intermediate reinforced masonry shear walls	2106.1.1.4	3½	2½	2¼	NL	NL	NP	NP	NP
H. Ordinary reinforced masonry shear walls	2106.1.1.2	2½	2½	1¾	NL	160	NP	NP	NP
I. Detailed plain masonry shear walls	2106.1.1.3	2	2½	1¾	NL	NP	NP	NP	NP
J. Ordinary plain masonry shear walls	[h] 2106.1.1.1	1½	2½	1¼	NL	NP	NP	NP	NP
K. Light frame walls with shear panels—wood structural panels/sheet steel panels	2306.4.1/ 2211	6	3	4	NL	NL	65	65	65
L. Light frame walls with shear panels—all other materials	2306.4.5	2	2 ½	2	NL	NL	35	NP	NP
2. Building Frame Systems									
A. Steel eccentrically braced frames, moment-resisting, connections at columns away from links	(15)[j]	8	2	4	NL	NL	160	160	100
B. Steel eccentrically braced frames, nonmoment resisting, connections at columns away from links	(15)[j]	7	2	4	NL	NL	160	160	100
C. Special steel concentrically braced frames	(13)[j]	6	2	5	NL	NL	160	160	100
D. Ordinary steel concentrically braced frames	(14)[j]	5	2	4½	NL	NL	160	100	100
E. Special reinforced concrete shear walls	1910.2.4	6	2½	5	NL	NL	160	160	100
F. Ordinary reinforced concrete shear walls	1910.2.3	5	2½	4½	NL	NL	NP	NP	NP
G. Detailed plain concrete shear walls	1910.2.2	3	2½	2½	NL	NP	NP	NP	NP
H. Ordinary plain concrete shear walls	1910.2.1	2	2½	2	NP	NP	NP	NP	NP
I. Composite eccentrically braced frames	(14)[k]	8	2	4	NL	NL	160	160	100

(continued)

TABLE 1617.6—continued
DESIGN COEFFICIENTS AND FACTORS FOR BASIC SEISMIC-FORCE-RESISTING SYSTEMS

BASIC SEISMIC-FORCE-RESISTING SYSTEM	DETAILING REFERENCE SECTION	RESPONSE MODIFICATION COEFFICIENT, R^a	SYSTEM OVER-STRENGTH FACTOR, $\Omega_0{}^g$	DEFLECTION AMPLIFICATION FACTOR, $C_d{}^b$	SYSTEM LIMITATIONS AND BUILDING HEIGHT LIMITATIONS (FEET) BY SEISMIC DESIGN CATEGORY[C] AS DETERMINED IN SECTION 1616.3				
					A or B	C	D[d]	E[e]	F[e]
J. Composite concentrically braced frames	(13)[k]	5	2	4½	NL	NL	160	160	100
K. Ordinary composite braced frames	(12)[k]	3	2	3	NL	NL	NP	NP	NP
L. Composite steel plate shear walls	(17)[k]	6½	2½	5½	NL	NL	160	160	100
M. Special composite reinforced concrete shear walls with steel elements	(16)[k]	6	2½	5	NL	NL	160	160	100
N. Ordinary composite reinforced concrete shear walls with steel elements	(15)[k]	5	2½	4½	NL	NL	NP	NP	NP
O. Special reinforced masonry shear walls	2106.1.1.5	5½	2½	4	NL	NL	160	160	100
P. Intermediate reinforced masonry shear walls	2106.1.1.4	4	2½	2½	NL	NL	NP	NP	NP
Q. Ordinary reinforced masonry shear walls	2106.1.1.2	3	2½	2¼	NL	160	NP	NP	NP
R. Detailed plain masonry shear walls	2106.1.1.3	2½	2½	2¼	NL	NP	NP	NP	NP
S. Ordinary plain masonry shear walls	2106.1.1.1	1½	2½	1¼	NL	NP	NP	NP	NP
T. Light frame walls with shear panels—wood structural panels/sheet steel panels	2306.4.1/ 2211	6½	2½	4½	NL	NL	65	65	65
U. Light frame walls with shear panels—all other materials	2306.4.5	2½	2½	2½	NL	NL	35	NP	NP
3. Moment-resisting Frame Systems									
A. Special steel moment frames	(9)[j]	8	3	5½	NL	NL	NL	NL	NL
B. Special steel truss moment frames	(12)[j]	7	3	5½	NL	NL	160	100	NP
C. Intermediate steel moment frames	(10)[j]	6	3	5	NL	NL	160	100	NP[h]
D. Ordinary steel moment frames	(11)[j]	4	3	3½	NL	NL	35[h]	NP[h,i]	NP[h,i]
E. Special reinforced concrete moment frames	(21.1)[l]	8	3	5½	NL	NL	NL	NL	NL
F. Intermediate reinforced concrete moment frames	(21.1)[l]	5	3	4½	NL	NL	NP	NP	NP
G. Ordinary reinforced concrete moment frames	(21.1)[l]	3	3	2½	NL	NP	NP	NP	NP
H. Special composite moment frames	(9)[k]	8	3	5½	NL	NL	NL	NL	NL
I. Intermediate composite moment frames	(10)[k]	5	3	4½	NL	NL	NP	NP	NP
J. Composite partially restrained moment frames	(8)[k]	6	3	5½	160	160	100	NP	NP
K. Ordinary composite moment frames	(11)[k]	3	3	2½	NL	NP	NP	NP	NP
L. Masonry wall frames	2108.9.6 2106.1.1.6	5½	3	5	NL	NL	160	160	100

(continued)

TABLE 1617.6—continued

DESIGN COEFFICIENTS AND FACTORS FOR BASIC SEISMIC-FORCE-RESISTING SYSTEMS

BASIC SEISMIC-FORCE-RESISTING SYSTEM	DETAILING REFERENCE SECTION	RESPONSE MODIFICATION COEFFICIENT, R[a]	SYSTEM OVER-STRENGTH FACTOR, Ω_0[g]	DEFLECTION AMPLIFICATION FACTOR, C_d[b]	SYSTEM LIMITATIONS AND BUILDING HEIGHT LIMITATIONS (FEET) BY SEISMIC DESIGN CATEGORY[c] AS DETERMINED IN SECTION 1616.3				
					A or B	C	D[d]	E[e]	F[e]
4. Dual Systems with Special Moment Frames									
A. Steel eccentrically braced frames, moment-resisting connections, at columns away from links	(15)[j]	8	2½	4	NL	NL	NL	NL	NL
B. Steel eccentrically braced frames, nonmoment-resisting connections, at columns away from links	(15)[j]	7	2½	4	NL	NL	NL	NL	NL
C. Special steel concentrically braced frames	(13)[j]	8	2½	6½	NL	NL	NL	NL	NL
D. Ordinary steel concentrically braced frames	(14)[j]	6	2½	5	NL	NL	NL	NL	NL
E. Special reinforced concrete shear walls	1910.2.4	8	2½	6½	NL	NL	NL	NL	NL
F. Ordinary reinforced concrete shear walls	1910.2.3	7	2½	6	NL	NL	NP	NP	NP
G. Composite eccentrically braced frames	(14)[k]	8	2½	4	NL	NL	NL	NL	NL
H. Composite concentrically braced frames	(13)[k]	6	2½	5	NL	NL	NL	NL	NL
I. Composite steel plate shear walls	(17)[k]	8	2½	6½	NL	NL	NL	NL	NL
J. Special composite reinforced concrete shear walls with steel elements	(16)[k]	8	2½	6½	NL	NL	NL	NL	NL
K. Ordinary composite reinforced concrete shear walls with steel elements	(15)[k]	7	2½	6	NL	NL	NP	NP	NP
L. Special reinforced masonry shear walls	2106.1.1.5	7	3	6½	NL	NL	NL	NL	NL
M. Intermediate reinforced masonry shear walls	2106.1.1.4	6½	3	5½	NL	NL	NP	NP	NP
5. Dual Systems with Intermediate Moment Frames									
A. Special steel concentrically braced frames[f]	(13)[j]	6	2½	5	NL	NL	160	100	NP
B. Ordinary steel concentrically braced frames[f]	(14)[j]	5	2½	4½	NL	NL	160	100	NP
C. Special reinforced concrete shear walls	1910.2.4	6	2½	5	NL	NL	160	100	100
D. Ordinary reinforced concrete shear walls	1910.2.3	5½	2½	4½	NL	NL	NP	NP	NP
E. Ordinary reinforced masonry shear walls	2106.1.1.2	3	3	2½	NL	160	NP	NP	NP
F. Intermediate reinforced masonry shear walls	2106.1.1.4	5	3	4½	NL	NL	NP	NP	NP
G. Composite concentrically braced frames	(13)[k]	5	2½	4½	NL	NL	160	100	NP
H. Ordinary composite braced frames	(12)[k]	4	2½	3	NL	NL	NP	NP	NP
I. Ordinary composite reinforced concrete shear walls with steel elements	(15)[k]	5½	2½	4½	NL	NL	NP	NP	NP

(continued)

TABLE 1617.6—continued

DESIGN COEFFICIENTS AND FACTORS FOR BASIC SEISMIC-FORCE-RESISTING SYSTEMS

BASIC SEISMIC-FORCE-RESISTING SYSTEM	DETAILING REFERENCE SECTION	RESPONSE MODIFICATION COEFFICIENT, R[a]	SYSTEM OVER-STRENGTH FACTOR, Ω_0[g]	DEFLECTION AMPLIFICATION FACTOR, C_d[b]	SYSTEM LIMITATIONS AND BUILDING HEIGHT LIMITATIONS (FEET) BY SEISMIC DESIGN CATEGORY[c] AS DETERMINED IN SECTION 1616.3				
					A or B	C	D[d]	E[e]	F[e]
J. Shear wall-frame interactive system with ordinary reinforced concrete moment frames and ordinary reinforced concrete shear walls	21.1[l] 1910.2.3	5½	2½	5	NL	NP	NP	NP	NP
6. Inverted Pendulum Systems									
A. Cantilevered column systems		2½	2	2½	NL	NL	35	35	35
B. Special steel moment frames	(9)[j]	2½	2	2½	NL	NL	NL	NL	NL
C. Ordinary steel moment frames	(11)[j]	1¼	2	2½	NL	NL	NP	NP	NP
D. Special reinforced concrete moment frames	21.1[l]	2½	2	1¼	NL	NL	NL	NL	NL
7. Structural steel systems not specifically detailed for seismic resistance	AISC—ASD AISC—LRFD AISI AISC—HSS	3	3	3	NL	NL	NP	NP	NP

For SI: 1 foot = 304.8 mm, 1 pound per square foot = 0.0479 KN/m².

a. Response modification coefficient, R, for use throughout.

b. Deflection amplification factor, C_d.

c. NL = not limited and NP = not permitted.

d. See Section 1617.6.4.1 for a description of building systems limited to buildings with a height of 240 feet or less.

e. See Section 1617.6.4.1 for building systems limited to buildings with a height of 160 feet or less.

f. Ordinary moment frame is permitted to be used in lieu of intermediate moment frame in Seismic Design Categories B and C.

g. The tabulated value of the overstrength factor, Ω_0, may be reduced by subtracting ½ for structures with flexible diaphragms but shall not be taken as less than 2.0 for any structure.

h. Steel ordinary moment frames and intermediate moment frames are permitted in single story buildings up to a height of 60 feet, when the moment joints of field connections are constructed of bolted end plates and the dead load of the roof does not exceed 15 pounds per square foot. The dead weight of the portion of walls more than 35 feet above the base shall not exceed 15 pounds per square foot.

i. Steel ordinary moment frames are permitted in buildings up to a height of 35 feet, where the dead load of the walls, floors and roof does not exceed 15 pounds per square foot.

j. AISC Seismic Part I or Part III, Section number.

k. AISC Seismic Part II, Section number.

l. ACI 318, Section number.

TABLE 1621.2
ARCHITECTURAL COMPONENTS COEFFICIENTS

ARCHITECTURAL COMPONENT OR ELEMENT	COMPONENT AMPLIFICATION FACTOR a_p[a]	COMPONENT RESPONSE MODIFICATION FACTOR R_p
Interior nonstructural walls and partitions (see also Section 1621.2.7)		
a. Plain (unreinforced) masonry walls	1.0	1.25
b. Other walls and partitions	1.0	2.5
Cantilever elements (unbraced or braced to structural frame below its center of mass)		
a. Parapets and cantilever interior nonstructural walls	2.5	2.5
b. Chimneys and stacks when laterally braced or supported by the structural frame	2.5	2.5
Cantilever elements (braced to structural frame above its center of mass)		
a. Parapets	1.0	2.5
b. Chimneys and stacks	1.0	2.5
c. Exterior nonstructural walls	1.0	2.5
Exterior nonstructural wall elements and connections (see also Section 1621.2.3)		
a. Wall element	1.0	2.5
b. Body of wall panel connections	1.0	2.5
c. Fasteners of the connecting system	1.25	1.0
Veneer		
a. Limited deformability elements and attachments	1.0	2.5
b. Low deformability elements or attachments	1.0	1.25
Penthouses (except when framed by an extension of the building frame)	2.5	3.5
Ceilings (see also Section 1621.2.5)	1.0	2.5
Cabinets		
a. Storage cabinets and laboratory equipment	1.0	2.5
Access floors (see also Section 1621.2.6)		
a. Special access floors (designed in accordance with Section 1621.2.6.1)	1.0	2.5
b. All other	1.0	1.25
Appendages and ornamentations	2.5	2.5
Signs and billboards	2.5	2.5
Other rigid components		
a. High deformability elements and attachments	1.0	3.5
b. Limited deformability elements and attachments	1.0	2.5
c. Low deformability materials and attachments	1.0	1.25
Other flexible components		
a. High deformability elements and attachments	1.0	3.5
b. Limited deformability elements and attachments	2.5	2.5
c. Low deformability materials and attachments	2.5	1.25

[a] Where justified by detailed dynamic analyses, a lower value for a_p is permitted, but shall not be less than 1. The reduced value of a_p shall be between 2.5, assigned to flexible or flexibly attached equipment, and 1, assigned to rigid or rigidly attached equipment.

TABLE 1621.3
MECHANICAL AND ELECTRICAL COMPONENTS COEFFICIENTS

MECHANICAL AND ELECTRICAL COMPONENT OR ELEMENT	Component Amplification Factor $(a_p)^a$	Component Response Modification Factor R_p
1. General mechanical		
a. Boilers and furnaces	1.0	2.5
b. Pressure vessels on skirts and free-standing	2.5	2.5
c. Stacks	2.5	2.5
d. Cantilevered chimneys	2.5	2.5
e. Other	1.0	2.5
2. Manufacturing and process machinery		
a. General	1.0	2.5
b. Conveyors (nonpersonnel)	2.5	2.5
3. Piping systems		
a. High deformability elements and attachments	1.0	3.5
b. Limited deformability elements and attachments	1.0	2.5
c. Low deformability elements or attachments	1.0	1.25
4. HVAC system equipment		
a. Vibration isolated	2.5	2.5
b. Nonvibration isolated	1.0	2.5
c. Mounted in-line with ductwork	1.0	2.5
d. Other	1.0	2.5
5. Elevator components	1.0	2.5
6. Escalator components	1.0	2.5
7. Trussed towers (free-standing or guyed)	2.5	2.5
8. General electrical		
a. Distributed systems (bus ducts, conduit, cable tray)	1.0	3.5
b. Equipment	1.0	2.5

a. Where justified by detailed dynamic analyses, a lower value of a_p is permitted, but shall not be less than 1. The reduced value of a_p shall be between 2.5, assigned to flexible or flexibly attached equipment, and 1, assigned to rigid or rigidly attached equipment.

where:

g = Acceleration of gravity in inches/sec² (mm/s²).

K_p = Stiffness of resilient support system of the component and attachment, determined in terms of load per unit deflection at the center of gravity of the component.

T_p = Component fundamental period.

W_p = Component operating weight.

Alternatively, the fundamental period of the component in seconds, T_p, shall be determined from experimental test data or by analysis.

1621.3.3 Mechanical and electrical component attachments. The stiffness of mechanical and electrical component attachments shall be designed such that the load path for the component performs its intended function.

1621.3.4 Component supports. Mechanical and electrical component supports and the means by which they are attached to the component shall be designed for the forces determined in Section 1621.1.4 and in conformance with the requirements of this code applying to the materials comprising the means of attachment. Such supports include, but are not limited to, structural members, braces, frames, skirts, legs, saddles, pedestals, cables, guys, stays, snubbers and tethers. Component supports are permitted to be forged or cast as a part of the mechanical or electrical component. If standard or proprietary supports are used, they shall be designed by either load rating (i.e., testing) or for the calculated seismic forces. The stiffness of the support shall be designed such that the seismic load path for the component performs its intended function.

Component supports shall be designed to accommodate the seismic relative displacements between points of support determined in accordance with Section 1621.2.5.

The means by which supports are attached to the component, except when integral (i.e., cast or forged), shall be designed to accommodate both the forces and displacements determined in accordance with Sections 1621.1.4 and 1621.1.5. If the value of $I_p = 1.5$ for the component, the local region of the support attachment point to the component shall be designed to resist the effect of the load transfer on the component wall.

TABLE 1622.2.5(1)
SEISMIC COEFFICIENTS FOR NONBUILDING STRUCTURES

NONBUILDING STRUCTURE TYPE	Response Modification Coefficient R	System Over-Strength Factor Ω_0	Deflection Amplification Factor C_d	STRUCTURAL SYSTEM AND HEIGHT LIMITS[c] (feet) Seismic design category as determined in Section 1616			
				B	C	D	E or F
1. Nonbuilding frame systems:							
a. Concentric braced frame of steel	See Table 1617.6			NL	NL	NL	NL
b. Special concentric braced frames of steel				NL	NL	NL	NL
2. Moment-resisting frame systems:							
a. Special moment frames of steel	See Table 1617.6			NL	NL	NL	NL
b. Ordinary moment frames of steel				NL	NL	50	50
c. Special moment frames of concrete				NL	NL	NL	NL
d. Intermediate moment frames of concrete				NL	NL	50	50
3. Ordinary moment frames of concrete				NL	50	NP	NP
4. Steel storage racks	4	2	3½	NL	NL	NL	NL
5. Elevated tanks, vessels, bins or hoppers[a]							
a. On braced legs	3	2	2½	NL	NL	NL	NL
b. On unbraced legs	3	2	2½	NL	NL	NL	NL
c. Irregular braced legs single pedestal or skirt supported	2	2	2	NL	NL	NL	NL
d. Welded steel	2	2	2	NL	NL	NL	NL
e. Concrete	2	2	2	NL	NL	NL	NL
6. Horizontal, saddle supported welded steel vessels	3	2	2½	NL	NL	NL	NL
7. Tanks or vessels supported on structural towers similar to buildings	3	2	2	NL	NL	NL	NL
8. Flat bottom, ground supported tanks, or vessels:							
a. Anchored (welded or bolted steel)	3	2	2½	NL	NL	NL	NL
b. Unanchored (welded or bolted steel)	2½	2	2	NL	NL	NL	NL
9. Reinforced or prestressed concrete:							
a. Tanks with reinforced nonsliding base	2	2	2	NL	NL	NL	NL
b. Tanks with anchored flexible base	3	2	2	NL	NL	NL	NL
10. Tanks with unanchored and unconstrained:							
a. Flexible base	1½	1½	1½	NL	NL	NL	NL
b. Other material	1½	1½	1½	NL	NL	NL	NL
11. Cast-in-place concrete silos, stacks and chimneys having walls continuous to the foundation	3	1¾	3	NL	NL	NL	NL
12. Other reinforced masonry structures	3	2	2½	NL	NL	50	50
13. Other nonreinforced masonry structures	1¼	2	1½	NL	50	50	50
14. Other steel and reinforced concrete distributed mass cantilever structures not covered herein including stacks, chimneys, silos, and skirt-supported vertical vessels	3	2	2½	NL	NL	NL	NL
15. Trussed towers (freestanding or guyed), guyed stacks and chimneys	3	2	2½	NL	NL	NL	NL
16. Cooling towers:							
a. Concrete or steel	3½	1¾	3	NL	NL	NL	NL
b. Wood frame	3½	3	3	NL	NL	50	50
17. Telecommunication towers							
a. Truss: Steel	3	1½	3	NL	NL	NL	NL
b. Pole: Steel	1½	1½	1½	NL	NL	NL	NL
Wood	1½	1½	1½	NL	NL	NL	NL
Concrete	1½	1½	1½	NL	NL	NL	NL
c. Frame: Steel	3	1½	1½	NL	NL	NL	NL
Wood	2½	1½	1½	NL	NL	NL	NL
Concrete	2	1½	1½	NL	NL	NL	NL
18. Amusement structures and monuments	2	2	2	NL	NL	NL	NL
19. Inverted pendulum-type structures (not elevated tank)[b]	2	2	2	NL	NL	NL	NL
20. Signs and billboards	3½	1¾	3	NL	NL	NL	NL
21. Other self-supporting structures, tanks or vessels not covered above	1¼	2	2½	NL	50	50	50

For SI: 1 foot = 304.8 mm.
NL = No limit.
NP = Not permitted.
a. Support towers similar to building-type structures, including those with irregularities (see Section 1616.5 for definition of irregular structures) shall comply with the requirements of Section 1617.6.3 for Seismic Design Category F structures.
b. Light posts, stoplight, etc.
c. Above base.